Title 14
DEVELOPMENT STANDARDS

Chapters:

14.04 Utility Reimbursement Agreements

14.08 Old World Bavarian Architectural Theme

14.10 Signs

14.12 Off-Street Loading and Parking

14.14 Street, Sidewalk, Water, Wastewater, Stormwater and Miscellaneous Utility Development Standards

14.16 Residential Structure Design Standards

14.17 Flags, Flagpoles, Towers, and Tower Structures

~~**14.24 Flood Damage Prevention Standards**~~

14.28 Lighting Standards

Chapter 14.04
UTILITY REIMBURSEMENT AGREEMENTS

Sections:

14.04.010 Purpose and intent.
14.04.020 Definitions.
14.04.030 Minimum project size.
14.04.040 Application.
14.04.050 Length of reimbursement provision.
14.04.060 Application review and approval.
14.04.070 Determination of reimbursement area boundary and reimbursement fee.
14.04.080 Written agreement.
14.04.090 Reimbursement agreement must be recorded.
14.04.100 Construction and acceptance of improvements – Recording of final fees.
14.04.110 Ownership of improvements or system.
14.04.120 Defective work.
14.04.130 Implementation of utility reimbursement agreement – Prepayment requirement.
14.04.140 Payments of utility reimbursement charge.

14.04.150 Rights and nonliability of city.
14.04.160 Director's authority – Violations.
14.04.170 Existing reimbursements – Completed construction.
14.04.180 City of Leavenworth financing participation in improvement.

14.04.010 Purpose and intent.

A. The purpose of this chapter is to define the rules and regulations for executing 20-year contracts between the city and developers for private construction of municipal water, sewer or storm drain improvements as may be required by LMC Titles 13, 15, 17 and 18, by providing means for both the partial cost recovery through a charge to later users who did not contribute to the capital costs and for the establishment of benefit areas defining which properties are subject to such charges. This chapter also implements Chapter 35.91 RCW as it now reads or is later amended.

B. It is intended that the processing of utility reimbursement agreements under this chapter be independent from the regulatory reform timelines contained in LMC Title 21. Further, nothing in this chapter shall be construed to create any city obligation to subsequently provide city services to property within a reimbursement area if that property is removed from the city's service area during the term of the reimbursement agreement. [Ord. 1376 § 1 (Exh. A), 2010; Ord. 1081 § 2 (Exh. A), 1998.]

14.04.020 Definitions.

The following definitions shall apply to this chapter:

"Benefit or reimbursement area" means that area which includes parcels of real estate adjacent to or likely to require a connection to improvements made by a developer who has applied to the city for a utility reimbursement agreement pursuant to this chapter.

"City" means the city of Leavenworth, a legally incorporated municipality represented by the elected city council and/or designated office or official.

"Cost of construction" means those costs (excluding interest charges or other financing costs) incurred for design, acquisition for right-of-way and/or easements, construction, labor, materials and installation required in order to create an improvement which complies with city standards, as determined by the director.

"Developer" means an individual, firm, corporation, limited liability company or partnership who proposes to improve real property within the city, its urban growth area ("UGA"), or within 10 miles of its corporate limits.

"Director" means the city of Leavenworth public works director or his/her designated representative.

"Utility reimbursement agreement" means a written contract, as approved by the city council and executed by the mayor, between the city and one or more developers providing both for construction of water, sewer or storm drain facilities and for partial reimbursement to the developer(s) by owner(s) of properties benefitted by the improvements. Although referred to generically as "utility reimbursement agreements" for ease of reference, such agreements will be processed separately as water reimbursement agreements, sewer reimbursement agreements, or storm drainage reimbursement agreements, each with its own application fee, reimbursement benefit area and charges.

"Utility reimbursement charge" means a fair pro rata share to be paid by an owner of property within an area benefitted by the private construction of municipal water, sewer or storm drainage improvements pursuant to this chapter, who did not contribute to the original cost of such improvements.

"Water, sewer or storm drainage improvements" means the acquisition of right-of-way and/or easements, design, inspection and installation of improvements to city standards, as defined in RCW 35.91.020 as it now reads or as hereafter amended. They are further defined to include the following:

A. "Water system improvements" includes, without limitation, such things as treatment facilities, mains, reservoirs, wells and appurtenances such as valves, pumping stations and pressure-reducing stations.

B. "Sewer system improvements" includes, without limitation, such things as treatment facilities, mains and maintenance holes, pumping stations, force mains, inlets, catch basins, ditches, and swales. This term also includes all sanitary sewer or storm sewer improvements.

C. "Storm drainage improvements" includes, without limitation, such things as swales, detention ponds and similar natural approaches to stormwater controls. [Ord. 1376 § 1 (Exh. A), 2010; Ord. 1081 § 2 (Exh. A), 1998.]

14.04.030 Minimum project size.

A. Any property owner whose property is located either within the city, its UGA, or within 10 miles of the city's corporate limits, only as allowed by the LMC, who uses private funds to construct water, sewer and/or storm drainage improvements in accordance with the standards specified in the LMC, to serve the area in which the real property of such owner is located, may apply to the city to establish a utility reimbursement agreement in order to recover a portion of the costs from subsequent users of the system(s).

B. To be eligible for a reimbursement agreement, the estimated cost of the proposed improvement must be more than $10,000; provided, however, that when proposed improvements cost between $5,000 and $10,000, and when at least 40 percent of the improvements can be projected to benefit property other than the development property giving rise to the improvement and reimbursement agreement, as determined by the director, the property owner/developer may apply for a reimbursement agreement. The estimated costs of the improvement shall be determined by the director, based upon a construction contract for the project, bids, engineering or architectural estimates or other information deemed by the director to be a reliable basis for estimating costs. The determination of the director shall be final. [Ord. 1376 § 1 (Exh. A), 2010; Ord. 1081 § 2 (Exh. A), 1998.]

14.04.040 Application.

A. An application to request a utility reimbursement agreement shall be made on a form provided by the city, and accompanied by a nonrefundable application fee in an amount set by council resolution.

B. The city will apprise the applicant of applicable design standards and specifications for the water, sewer or storm drainage improvements which will be required for the proposed project, consistent with city ordinances and/or adopted design manuals, as identified by the applicable development review process.

C. Based on the information provided by the city, the applicant shall submit the following information in addition to the application form:

1. Preliminary utility design drawings; and

2. An itemized estimate of the total projected costs of the system improvements, prepared and signed by a licensed civil engineer or in the form of a bid submitted by a qualified contractor (if more than one bid has been obtained, all bids must be submitted to the city).

D. When deemed necessary by the director, the following information will also be required to assist in determining the benefit area and reimbursement charge:

1. A scaled vicinity drawing, stamped by a licensed civil engineer or licensed land surveyor depicting the proposed improvements, location and benefitted area;

2. The name and mailing address of each owner of record of property within the proposed benefit area, together with the legal description, size and county assessor's tax number for each property, to be certified complete and accurate by the applicant; and

3. Such other information as the director determines is necessary to properly review the application. [Ord. 1376 § 1 (Exh. A), 2010; Ord. 1081 § 2 (Exh. A), 1998.]

14.04.050 Length of reimbursement provision.

The utility reimbursement agreement shall be for a period not to exceed 20 years from the date of final acceptance of the improvements by the city pursuant to LMC 14.04.110. [Ord. 1376 § 1 (Exh. A), 2010; Ord. 1081 § 2 (Exh. A), 1998.]

14.04.060 Application review and approval.

A. The director shall review all applications and shall approve the application only if the following requirements are met:

1. The project satisfies the minimum cost requirement and complies with city design and construction standards;

2. The proposed improvements fall within the definition of water, sewer and/or storm drainage improvements;

3. One of the following:

a. If the application for utility reimbursement agreement is related to a land division application, it shall be filed with the city as a complete application and accompanied by all applicable fees prior to the issuance date of the preliminary notice of decision for the related land division.

b. If the application for utility reimbursement agreement is related to a building permit application, it shall be filed as a complete application and accompanied by all applicable fees prior to the issuance date of the certificate of occupancy for the related building permit.

4. The proposed improvements are consistent with the city's comprehensive plan, utility plans and all other policy documents governing growth and development within the city; and

5. The city has the capability and capacity to service the water, sewer and/or storm drainage improvements.

B. In the event all of the above criteria are not satisfied, the director may condition approval as necessary in order for the application to conform to such criteria, or shall deny the application. The final determination of the director shall be in writing.

C. The final determination of the director is an administrative decision that may be appealed by an applicant to the city council. The applicant shall file a request for review of the director's final determination with the city clerk-treasurer no later than 10 calendar days after a copy of the final determination is mailed to the applicant at the address listed on the application. In reviewing a final determination, the city council shall apply the criteria set forth above, and shall uphold the decision of the director unless evidence clearly demonstrates that the criteria have been satisfied. [Ord. 1376 § 1 (Exh. A), 2010; Ord. 1081 § 2 (Exh. A), 1998.]

14.04.070 Determination of reimbursement area boundary and reimbursement fee.

A. The director shall define the reimbursement area for all approved applications based upon the following:

1. A determination of which property owners did not contribute to the original cost of the improvements for which the reimbursement agreement applies and whose parcels are located so that they may subsequently tap into or use the same, including not only those which may connect directly thereto, but also those who may connect to laterals or branches connecting thereto, based on city codes and standards. The applicant/property owner is not entitled to utility reimbursement funds for parcels which are adjacent to the improvements if those lots are owned by the applicant/property owner at the time they apply for the utility reimbursement agreement or at the time the utility improvements are constructed, and if said lots have been sold, with homes constructed, or if the person requesting reimbursement has otherwise recovered the proportionate utility reimbursement charge for that property.

2. An estimated amount of the reimbursement charge shall be established so that each property will pay a share of the costs of the improvements, which is proportional to the benefits which accrue to the property determined at the city's sole discretion on an acre, square footage, front footage, zone front footage, equivalent water meter, or other equitable basis, or any combination thereof.

B. A notice containing the benefit reimbursement area boundaries, preliminary charges and a description of the property owners' rights to request a public hearing before the city council with regard to the area boundaries and special benefits and charges shall be forwarded by first-class mail to the property owners within the proposed benefit reimbursement area.

C. Any appeal from an affected property owner requesting a public hearing shall be filed within 10 calendar days of the date the notice is mailed to the property owners. Any decision of the director not appealed from shall be final at the time made. The appeal must be accompanied by a nonrefundable fee in an amount set by council resolution. After reviewing the public hearing testimony and the director's determination, the city council shall apply the criteria set forth above, and may approve, modify or reject the benefit reimbursement area and/or charges. The city council's determination shall be final, unless it is judicially appealed within 21 days of the issuance of the city council decision. [Ord. 1376 § 1 (Exh. A), 2010; Ord. 1081 § 2 (Exh. A), 1998.]

14.04.080 Written agreement.

A. Upon approval of the application, determination of the estimated costs of construction, the reimbursement area and estimated fees by the director, the applicant shall sign a reimbursement agreement in the form supplied by the city. The signed

agreement, the application and supporting documents, together with the director's estimate of cost of construction, and determination of reimbursement area and estimated fees shall be presented to the city council with a request that the city council authorize the mayor to sign the reimbursement agreement on behalf of the city.

B. In the event costs incurred by the city for engineering or other professional consultant services required in processing the application exceed the amount of the application fee, the director shall so advise the city council, and council approval of the utility reimbursement agreement shall be conditioned upon receipt of payment by the applicant of an additional amount sufficient to compensate the city for its actual costs in excess of the application fee.

C. Each utility reimbursement agreement approved by the city shall include a provision requiring that every two years from the date the agreement is executed, a property owner entitled to reimbursement under the agreement shall provide the city of Leavenworth with information regarding the current name, address, and telephone number of the person, company, or partnership that originally entered into the agreement. If the property owner fails to comply with the notification requirements of this subsection within 60 days of the specified time, then the city of Leavenworth may collect any reimbursement funds owed to the property owner under the agreement. Such funds must be deposited by the city of Leavenworth in the capital fund of the city. [Ord. 1376 § 1 (Exh. A), 2010; Ord. 1081 § 2 (Exh. A), 1998.]

14.04.090 Reimbursement agreement must be recorded.

A. In order to become effective, a reimbursement agreement must be recorded with the Chelan County auditor within 30 days of approval by the city, after it has been signed by all parties. It shall be the sole responsibility of the applicant to record the reimbursement agreement.

B. Within 30 days after receipt of evidence that the reimbursement agreement has been recorded, the director shall record a notice of additional tax or correction charge with the Chelan County auditor's office as required by RCW 65.08.170. [Ord. 1376 § 1 (Exh. A), 2010; Ord. 1081 § 2 (Exh. A), 1998.]

14.04.100 Construction and acceptance of improvements – Recording of final fees.

A. After the utility reimbursement agreement has been signed by all parties, and all necessary permits and approvals have been obtained, the applicant shall construct the improvements, beginning within 12 months and, upon completion, request final inspection and acceptance of the improvements by the city, subject to any required obligation to repair defects. An appropriate bill of sale, easement and any other document needed to convey the improvements to the city and to ensure right of access for maintenance and replacement shall be provided, along with documentation of the actual costs of the improvements and a certification by the applicant that all of such costs have been paid. If construction of the improvements covered by the utility reimbursement agreement has not begun within said 12 months, the utility reimbursement agreement shall be null and void.

B. The final cost of the improvements shall be reviewed against the preliminary assessments established by the city. Upon a showing of good cause, as determined by the director, the agreement shall be modified to include cost overruns up to a maximum

of 10 percent. In the event that actual costs are less than the director's estimate by 10 percent or more, the director shall recalculate the charges, reducing them accordingly. For any revisions under this section, the director shall cause a revised list of charges to be recorded with the Chelan County auditor, with a notice to title on each property within the benefitted area. [Ord. 1376 § 1 (Exh. A), 2010; Ord. 1081 § 2 (Exh. A), 1998.]

14.04.110 Ownership of improvements or system.

A. Upon approval of a utility reimbursement agreement and the completion and acceptance of the construction, the improvement(s) and/or system(s) shall become the property of the city. The city may charge and receive fees for utility system use according to the city's established rates.

B. A copy of the engineering "as-built" plans, specifications and drawings, including all necessary rights-of-way and easement documents, shall be provided to the city prior to acceptance of the water, sewer and/or storm drainage facilities. In addition, the city may require that the documents be provided on AutoCAD or another electronic format as specified by the city. The developer shall also deliver to the city reproducible copies of all plans, specifications and drawings, and shall comply with any other requirements imposed by city codes or adopted standards for engineering plans.

C. No connection to, or other use of, the facilities will be allowed or permitted until the city has officially accepted the construction.

D. Transfer of ownership to the city shall be clear of all encumbrances. [Ord. 1376 § 1 (Exh. A), 2010; Ord. 1081 § 2 (Exh. A), 1998.]

14.04.120 Defective work.

The applicant shall be responsible for all work found to be defective within one year after the date of acceptance of the improvements by the city. The director may require the applicant or his/her assignee to provide the city with a Washington surety maintenance guaranty bond or other appropriate bond as set forth in the LMC, including, without limitation, the city water and sewer codes or any adopted design standards. [Ord. 1376 § 1 (Exh. A), 2010; Ord. 1081 § 2 (Exh. A), 1998.]

14.04.130 Implementation of utility reimbursement agreement – Prepayment requirement.

A. Upon recording, the utility reimbursement agreement and charge shall be binding upon all property owners of record within the benefit area who were not parties to the contract. If an owner later develops his or her property within 15 years and is not required to install similar utility improvements because such improvements were already installed under the reimbursement agreement, the city shall require that owner to reimburse the developer/owner who initially constructed the projects pursuant to the reimbursement share previously determined in the utility reimbursement agreement.

B. Connection to or use of the system(s) by property owners within the benefit area shall be prohibited and development permission shall not be granted unless the city has received payment of the utility reimbursement charge, including administrative costs. Unless modified in the agreement, the city shall add 10 percent, but not less than $20.00, to each utility reimbursement charge, to be used by the city to defray the costs of labor, bookkeeping and accounting necessary to administer the agreement, to be

adjusted annually in accordance with ENR Index. No building permit shall be issued until reimbursement payment is made.

C. The utility reimbursement charge shall be in addition to the usual and ordinary charges, including hookup fees, system development charges, and any other fees which must be paid by persons applying for city water or sewer service, as required by city ordinances.

D. The city will exercise its best efforts to assure compliance with this section; however, in no event shall the city incur liability for an unauthorized connection to or use of the facilities.

E. Where any tap or connection is made into any water, sewer or storm drainage system(s) without payment being made as required by this chapter, the city may order the unauthorized tap or connection and all connecting pipe located in the city right-of-way removed without any liability to the city or city officials. [Ord. 1376 § 1 (Exh. A), 2010; Ord. 1081 § 2 (Exh. A), 1998.]

14.04.140 Payments of utility reimbursement charge.

A. The city shall pay the amounts due the beneficiary within 60 calendar days of receipt, subject to subsection (C) of this section, by certified mail, return receipt requested.

B. When the utility reimbursement fee for a particular parcel has been paid, at the request of the owner/payor, the city shall approve a certification of payment which may be recorded by the owner.

C. Throughout the term of the agreement the developer shall notify the city, in writing, of any change of his or her name(s) or address(es). Absent such notice, the city is not responsible for locating any developer entitled to benefits under the utility reimbursement agreement. The developer may not assign any rights under the utility reimbursement agreement without written notification to the city. Absent such notification, any assignment of rights under the agreement shall have no effect on the obligations of the city under the reimbursement agreement.

D. Any funds not claimed by the developer within 180 days from the date collected shall become the property of the city. Before the expiration of the 180 days, the city shall send to the developer, by certified mail, return receipt requested, a final notice of the city's intent to deposit the funds as city revenue. If the city does not receive a response in writing by the expiration of the 180 days, the funds shall be revenue to the applicable city sewer, water or stormwater utility, or as allowed by law. [Ord. 1376 § 1 (Exh. A), 2010; Ord. 1081 § 2 (Exh. A), 1998.]

14.04.150 Rights and nonliability of city.

A. The city reserves the right to refuse to enter into any utility reimbursement agreement or to reject any application thereof.

B. All applicants for utility reimbursement agreements shall be required to provide a written release, indemnification, and hold harmless agreement releasing and indemnifying the city from all claims of any nature, including property damage and personal injury arising out of the execution, establishment, enforcement and implementation of such agreement including claims arising during the course of construction and during the one-year warranty period following acceptance of the improvements by the city. Such indemnification shall include attorney fees and costs

reasonably incurred in the defense of such action. [Ord. 1376 § 1 (Exh. A), 2010; Ord. 1081 § 2(Exh. A), 1998.]

14.04.160 Director's authority – Violations.

Whenever the director determines that a condition exists in violation of this chapter, or any code or standard required to be adhered to by this chapter, he or she is authorized to enforce the provisions of this chapter and/or to order correction and discontinuance of any violation pursuant to the procedures set forth in the Leavenworth Municipal Code. [Ord. 1376 § 1 (Exh. A), 2010; Ord. 1081 § 2(Exh. A), 1998.]

14.04.170 Existing reimbursements – Completed construction.

A. Nothing in this chapter shall be construed as changing or modifying any existing utility reimbursement agreements between the city and a developer, which shall remain in full force and effect and subject to its terms.

B. At any time prior to May 12, 1999, property owners may apply to the city of Leavenworth for reimbursement agreements for water, sewer or storm drainage improvements already constructed on the effective date of the ordinance adopting this chapter. Notwithstanding other provisions of this chapter, the reimbursement charge for such agreements shall be based on the actual cost of the constructed improvement, but only to the extent it was required by the city. All other provisions of this chapter shall apply to such agreements. [Ord. 1376 § 1 (Exh. A), 2010; Ord. 1081 § 2(Exh. A), 1998.]

14.04.180 City of Leavenworth financing participation in improvement.

A. The utility reimbursement agreement approved by the Leavenworth city council may provide that the city participates in financing of the development of water or sewer facilities development projects in which case the city shall have the same rights to reimbursement as owners of real estate who make contributions as authorized herein. If the projects are jointly financed by a combination of municipal funding and private funding by real estate owners, the amount of reimbursement received by each participant in the financing must be a pro rata share.

When the city of Leavenworth seeks reimbursement from an owner of real estate under this subsection, such reimbursement is limited to the dollar amount authorized under RCW 35.91.020 as now enacted and hereafter amended. It may not collect any additional reimbursement, assessment, charge, or fee for the infrastructure or facilities that were constructed under the utility reimbursement agreement; provided, however, that the city may collect amounts for services or infrastructure that are additional expenses not subject to the utility reimbursement agreement. [Ord. 1376 § 1 (Exh. A), 2010.]

Chapter 14.08
OLD WORLD BAVARIAN ARCHITECTURAL THEME[1]

Sections:

14.08.010 Purpose.
14.08.020 Applicability.
14.08.030 Design review board review.
14.08.040 Design elements.
14.08.050 Supplemental regulations.
14.08.060 Small commercial buildings.
14.08.070 Mechanical equipment.
14.08.080 Signs.
14.08.090 Enforcement.
14.08.100 Appendix: Portfolio of Photographs of Old World Bavarian Architecture and Signs for the City of Leavenworth.

14.08.010 Purpose.

The purpose of this chapter is to assist all involved in the design of new buildings, structures, walkways, plazas, lighting, or other miscellaneous items identified herein or the alteration of existing buildings, structures, walkways, plazas, lighting, or other miscellaneous items identified herein in order to develop and promote Leavenworth's Old World Alpine Bavarian village theme. [Ord. 1374 § 1 (Exh. A), 2010; Ord. 1164 § 1, 2001; Ord. 1157 § 1, 2001.]

14.08.020 Applicability.

A. Within all of the commercial zone districts of the city and the city's urban growth area, the following shall conform in exterior design to the Old World Bavarian architectural theme:

1. New buildings, structures, walkways, plazas, lighting, or other miscellaneous items identified herein;
2. Additions, substantial alterations and individual changes to structures and buildings; and
3. Modifications to walkways, plazas, lighting and other miscellaneous items identified herein.

B. For purposes of subsection (A) of this section, the term "substantial alteration" shall be defined as any interior and/or exterior alteration of an existing building or structure, the total cost of which (including but not limited to electrical, mechanical, plumbing and structural changes) within any 18-month period equals or exceeds 75 percent of the value of that building or structure at the time that a permit is applied for. The value shall be determined by using a contractor's estimate for construction and either the most recent assessed value as stated in the Chelan County assessor's current year tax records or an appraisal submitted by a licensed real estate appraiser. The estimate and the appraisal shall be dated no later than six months prior to the date of permit submittal.

C. When a permit for new construction and/or an addition is applied for, the entire structure and/or addition shall comply with all of the requirements of this chapter except as follows:

1. For zero lot line buildings, at a minimum, partial-pitched roofs which comply with the requirements of LMC 14.08.040(B) shall be incorporated on all sides of the structure which front on a street and/or alley. At a minimum, the partial-pitched roof shall span the entire length of the wall fronting on the public street and/or alley and shall extend 16 feet from the perimeter edge of the structure back toward the center of the structure, which measurement shall not include that portion overhanging the edge of the structure.

D. When a permit for a substantial alteration is applied for, the entire structure, including all existing components, shall comply with all of the requirements of this chapter, with the exception of roof and wall treatments, which at a minimum shall comply with the following:

1. If the substantial alteration is equal to or greater than 75 percent, but less than 90 percent of the value of the structure (using the valuation methodologies and time frame in subsection (B) of this section), the following requirements shall apply:

a. If the existing roof is not in conformance with the requirements of this chapter, it shall be replaced on all sides of the structure which front on a street and/or alley with a partial-pitched roof which complies with the requirements of LMC 14.08.040(B). The partial-pitched roof shall span the entire length of the wall fronting on the public street and/or alley and shall extend 16 feet from the perimeter edge of the structure back toward the center of the structure, which measurement shall not include that portion overhanging the edge of the structure.

b. If the existing wall treatment is not in conformance with the requirements of this chapter, the entire surface of those walls of the structure which front on a public street shall be resurfaced with wall treatment which complies with the requirements of LMC 14.08.040(C). The remaining walls of the structure (which do not front on a public street) shall not be required to be resurfaced with a compliant wall treatment, but shall be painted in an identical or complementary color to the compliantly surfaced walls. This exception to wall treatment requirements applies only to the wall surfacing materials; all other requirements of this chapter, including, but not limited to, decorative windows, doors, and trims shall apply.

2. If the substantial alteration is 90 percent or more of the value of the structure (using the valuation methodologies and time frame in subsection (B) of this section), the application shall be treated as new construction and/or an addition and the entire structure and/or addition shall comply with the requirements of this chapter except as follows:

a. For zero lot line buildings, at a minimum, partial pitched roofs which comply with the requirements of LMC 14.08.040(B) shall be incorporated on all sides of the structure which front on a street and/or alley. At a minimum, the partial pitched roof shall span the entire length of the wall fronting on the public street and/or alley and shall extend 16 feet from the perimeter edge of the structure back toward the center of the structure, which measurement shall not include that portion overhanging the edge of the structure.

E. Every change to an exterior element of a structure, including, but not limited to, doors, windows, wall finishes, paint, roofing materials, and/or structural elements shall comply with the requirements of this chapter unless such change is routine maintenance and repair; in which case, it may be repaired with a material which is

identical to that of the original materials or a material which is determined equally or more compliant by the community development director or his/her designee. This determination of compliance may be remanded at his/her discretion to the design review board. For purposes of this chapter, routine maintenance and repair is defined as corrective and/or preventative actions which do not result in an alteration but which allow for a structure to perform its intended, original purpose.

F. An existing structure which is not compliant with the Old World Bavarian Architectural Theme shall not be relocated to the commercial zone districts or be moved from one place to another within the commercial zone districts. A determination of the compliance or noncompliance of the structure shall be made by making application to the design review board, which shall render findings of fact in making this determination. If a structure can be determined to be compliant with minor improvements which do not exceed 25 percent of the value (using the valuation methodologies in subsection (B) of this section), the structure shall be allowed to be relocated subject to compliance with conditions placed on the permit by the design review board. To ensure that when a structure is placed it shall comply completely and in a timely manner with the permit requirements, the applicant shall be required to bond for all improvements at 150 percent of the total value (using valuation methodologies in subsection (B) of this section) and all improvements shall be completed within 120 days of the date of permit approval. Noncompliance will result in a requirement for the property owner to remove the structure.

G. A change of occupancy which results in physical changes to the structure shall be treated as either new construction, a substantial alteration or changes to individual elements in accordance with how the said change or changes meets the thresholds described in subsections (B) through (F) of this section and shall be held to the requirements as delineated thereto with the following exceptions:

1. An existing single-family residential structure which converts to a use other than an overnight rental and undergoes a change of occupancy pursuant to the building code shall be treated as new construction and shall comply with the requirements of this chapter applicable to new construction; except the roof shall not be required to be brought into compliance; however, fascia shall be trimmed with materials which comply with the requirements of this chapter.

a. When roof materials and/or structural roof components are replaced in a manner which is not routine maintenance and repair (e.g., a patch job), the materials and structural components shall comply with the requirements of LMC 14.08.040(B).

2. An existing single-family residential structure which converts to an overnight rental shall not be required to comply with this chapter except as follows:

a. If there are exterior and/or interior alterations proposed to the structure which exceed 50 percent of the value of the structure (using the valuation methodologies and time frame in subsection (B) of this section) the structure shall be treated as new construction and shall comply with the requirements of this chapter; except the roof structure shall not be required to be brought into compliance with this chapter.

i. When roof materials and/or structural roof components are replaced in a manner which is not routine maintenance and repair (e.g., a patch job), the

materials and structural components shall comply with the requirements of LMC 14.08.040(B).

b. When an overnight rental converts to a subsequent use, it shall be required to comply with subsection (G) of this section. [Ord. 1374 § 1 (Exh. A), 2010; Ord. 1157 § 1, 2001.]

14.08.030 Design review board review.

A. No building or structure (regardless of the size), walkway, plaza, lighting or other miscellaneous items identified herein shall be placed, constructed, changed, altered, added to, and/or undergo a change in occupancy status pursuant to the building code in any commercial zone district without first obtaining design review board approval and a permit. All applications for permits for construction, changes, alterations, additions, and/or changes of use of buildings, structures, walkways, plazas, lighting, or other miscellaneous items identified herein shall first be submitted to and be reviewed and approved by the design review board who shall determine if the application is compliant with this chapter for the Old World Bavarian architectural theme.

B. All applications for permits required by this chapter shall be accompanied by a complete set of plans and blueprints clearly defining the construction, changes, alterations, or remodeling and stating the proposed location, dimension, and types of construction and design. The plans and blueprints shall be drawn to scale and shall clearly define the roofing materials and siding materials to be used and also the finish, paint or other materials to be used or applied on all exterior walls, trims, and other details and shall state a contemplated date of commencement and completion of the project, and shall become the property of the city upon submission of the application. All applications submitted shall be accompanied by payment of a permit fee for the amount identified in the city's fee schedule.

C. The applicant shall submit an accurate colored rendering of the proposal. The colored rendering shall either be done in a form of paint, colored pencils, colored pens, or be computer-generated. Paint chips or paint samples shall be submitted with the colored rendering for all colors included in the rendering.

D. In determining whether the proposed placement, construction, change, addition, or alteration conforms to exterior design of the Old World Bavarian architectural theme, the design review board shall consider the compatibility of the proposed exterior design with the existing design review board approved Bavarian structures and designs in the commercial zone districts of the city and the city's urban growth area and may, in addition, consult the following publications which contain many examples of architecture, including some examples that are specific to the Old World Bavarian architectural theme:

1. "Bayern in Bildern." Illustrations of Bavaria. Munchen, L. Muller (1971);
2. "Hauser in den Alpen," by Viktor Proksch. Pinquin Verlag, Innsbruck, and Umschau Verlag, Frankfurt A.M. (1964) (This book is also available in an English/French version);
3. "Bemalte Fassaden," by Margarete Baur-Heinbold. Verlag Georg D.W. Callwey, Munchen (1975);
4. "Bayern = Bavaria = La Baviere: e. Bildbd, von Otto Siegner." Munchen-Pullach: Simon, (1975);
5. "Wohnen im Alpenland," by S. Staffa. Verlag, Kitzbuhel;

6. “Die Schnosten Bauernhofe Oberbayerns,” by Ottmar Schuberth. Munchen (1999).

E. Copies of the above publications and similar related reference works shall be kept on hand by the city for review by applicants and by members of the design review board.

F. An applicant may submit a preliminary sketch prior to furnishing a complete application for review at a regularly scheduled design review board meeting. Following review by the board, the applicant shall complete the application as directed by the board in accordance with this chapter.

G. Design review applications shall be processed in accordance with the limited administrative review process, pursuant to Chapter 21.09 LMC. In order to schedule a design review board meeting, a complete application shall be received by the community development department at least seven working days prior to the meeting.

H. Changes to a design review board approved design, which are subsequently proposed after the initial approval of the design review board permit, shall require submission of an application to the design review board for approval prior to construction of the change.

I. Supporting reference materials shall be supplied to the design review board by the applicant at the request of the board.

J. The community development director or designee may administratively approve the design of retaining walls, landscaping structures, landscaping planter sign bases, lighting, fences or fence-type walls, garbage enclosures, walkways, plazas or similar structures when they are not proposed in conjunction with a larger project that would require design review board review. In addition, the community development director or designee may administratively approve changes to the individual exterior elements (LMC 14.08.020) which collectively do not exceed five percent of the value of the structure (using the valuation methodologies and time frame in LMC 14.08.020(B)) when they are not proposed in conjunction with a larger project that would require design review board review. Approval shall be subject to the standards contained in this chapter. At the discretion of the director, the application, or portions of the application, may be required to be submitted to the design review board for review and approval.

K. The applicant or a representative of the applicant shall be in attendance at the design review board meeting for an application to be reviewed by the design review board.

L. Chelan County has adopted the city’s codes within the city’s urban growth area, including Chapter 14.08, the Old World Bavarian architectural theme. The city’s design review board will perform reviews of applications for projects located in the urban growth area and relay its findings to the county for inclusion in the county decision-making process. The county is the decision-making authority within the geographic boundary of the city’s urban growth area. [Ord. 1374 § 1 (Exh. A), 2010; Ord. 1164 § 2, 2001; Ord. 1157 § 1, 2001.]

14.08.040 Design elements.

The design review board, in granting or denying approval of a permit in accordance with this chapter, should consider the following criteria. This list is intended to serve as a guide for prospective developers of representative Old World Bavarian design features which have proven effective on commercial buildings in the city. The following design

elements shall be incorporated, as applicable, in design proposals brought before the Leavenworth design review board to implement the Old World Bavarian architectural theme in the city of Leavenworth. A minimum of three decorative design details (in addition to structural elements) shall be included on a building or structure. Decorative design details include, but are not limited to, painted trim, decorative fascia, window treatments, balconies, and murals.

A. Shapes.

1. The single most defining shape of Bavarian-Alpine architecture is the low-pitched roof with expansive overhangs, regardless of building size. An alpine roof is designed to hold snow for insulation. The overhangs deal with ice buildup and help keep the area right next to the house free of snow. In the rainy regions of Germany where snow is not prevalent, the roofs are very steep in order to shed water.
2. Buildings are rectangular or are combinations of rectangles.
3. Very large warehouse- or market-type buildings pose special problems to this design theme. They must, however, include traditional Bavarian design elements and materials.

B. Roofs.

1. Roofs have a pitch of three and one-half to five and one-half.
2. Roof overhangs are expansive on the front and sides and usually require rafter and lookout beams. Lookout beams shall be scrolled or have decorative faceplates. The scrolling shall be traditional Rococo, Baroque or folk designs. Lookout beams shall not extend beyond the fascia.
3. Pitched Roof Materials.
   a. Tile, simulated tile, standing seam metal, high-profile asphalt shingles, or heavy shakes are acceptable.
   b. Acceptable colors for standing seam metal are red, brown, green or gray. Galvanized metal is unacceptable. Tile or asphalt shingle colors should be red, gray, or brown earth tones.
   c. Standard overlap metal, plain shingles, and profileless asphalt shingles are not acceptable.
4. Fascia shall be scrolled or multiple profile.
5. When snow guards are used or intended to be used, they shall be included in the overall design review approval.
6. If roof rafters are exposed (open soffit), the underside of the roof covering shall be one of the following materials: resawn plywood, tongue and groove boards (beveled or plain), T-lll run lengthwise, solid wood, or exterior finish sheeting.

C. Walls. Wall treatments shall consist of the following:

1. Stucco or stucco-like material;
2. Wood, usually on the upper level of the wall;
3. A combination of the above;
4. Unacceptable materials or methods are:
   a. Metal siding;
   b. Stucco board, or panelized preapplied stucco, except that the use of Hardipanel® may be allowed for zero lot line walls where there are no required side yard setbacks and where another building either has already been built to each side of the new building or is being built concurrently, and the walls being covered with Hardipanel® will not be generally visible;
   c. Halftimbering (see LMC 14.08.l00(K));

d. Concrete block (cracked or plain). If concrete block is used, it shall be stuccoed;

5. Retaining walls, landscaping structures, permanent or semi-permanent (because of size and/or weight) landscape planters, landscaping planter sign bases, and similar structures may be constructed of landscaping timbers (not railroad ties), stone, irregularly shaped rock, large boulders, poured concrete, split-faced concrete block landscaping stones, or other new materials as approved by the design review board. Cultured stone that has the appearance of stone, irregularly shaped rock or large boulders is acceptable. Round river rock is not acceptable;

6. Fences or fence type walls may be constructed of decorative metal, wrought iron, wood, stone, stucco, irregularly shaped rock, poured concrete, split-faced concrete block stones, or other new materials as approved by the design review board. Cultured stone that has the appearance of stone, irregularly shaped rock or large boulders is acceptable. Round river rock is not acceptable. Chain link fencing is not allowed in any commercial zone district, except as follows:

   a. When required by state or federal law.

   b. When deemed necessary by a public safety official for public safety purposes.

   c. When used for security purposes on property owned and/or leased by a public entity.

   d. When used as temporary construction fencing.

1. At its discretion, the city may require that shielding components be incorporated into the fencing, apply time limits to the installation, and/or apply other conditions as determined necessary to mitigate impacts.

D. Balconies. Balconies are optional. Where architectural balconies not intended for actual use are proposed, they shall have an apparent means of access, i.e., a door or false door, or large window. If balconies are present, they shall contain traditional design elements, such as:

1. Heavy beam supports;

2. Scrolled slats;

3. Flower boxes. This is the traditional location for them.

E. Doors and Doorways. Doors are constructed of wood or materials with a wood-like appearance; however, doors used for utility and/or service entrances can be constructed of other materials but shall be colored to blend with adjacent surfaces. Many doorways are arched. The arched doorway or entryway should be constructed of wood or stucco.

F. Windows. Window treatment options are:

1. Recessed, with or without painted decorative trim;

2. Shutters are desirable when painted trim is not applied;

3. Painted decorative trim;

4. Grid inserts in the glazing;

5. Flower boxes;

6. Windows may be arched;

7. A combination of the above is acceptable; however, one of the window treatment options in subsections (F)(1) through (5) of this section is mandatory;

8. Flush, unadorned windows are unacceptable.

G. Trim. Trim is the least of the design elements, not the focus of the design.

1. Scrolling. Decorative scroll work shall be required on fascia board and other trim. In general, scrolling follows traditional or Rococo designs. Design details for scroll work shall be included with the application.
2. Stone is used in rectangular linear forms for accents. River rock, concrete block (cracked or plain), and irregular stone slabs are unacceptable.
3. Wood shall not be used as trim over stucco.

H. Decorative Painting. Designs for murals or art work on exterior walls or around windows and doors shall be presented for design review board approval before application to the building.

1. Corner walls may be painted to simulate rectangular stone.
2. Three-dimensional painting is encouraged around windows and doors when shutters are not present. Classic as well as Rococo designs should be used.
3. Murals may be of a traditional Bavarian theme. Scenic murals are also acceptable. All murals are subject to design approval by the Design Review Board. Murals may incorporate a sign, or may stand alone. When a sign is incorporated into the mural, then a sign permit and compliance with Chapter 14.10- Signs is required.

I. Colors. Color selection shall incorporate the following:

1. The predominant stucco color is white or off-white. Pastels are acceptable, but only with white or off-white accents on stucco trim. Bold bright colors are unacceptable.
2. All wood trim (including beams, fascia and siding) shall be stained with transparent wood-tone stain. Very seldom is opaque stain or painted (color) trim used over wood. However, hunter green and other accent colors are sometimes used for shutters and flower boxes.
3. A paint chip or paint sample shall be submitted with the colored rendering of a design for all colors incorporated in the rendering. This requirement applies to the sign and architectural theme sections of this code. The sign portion of the mural is not exempt from this requirement, although the rest of the mural is.

14.08.050 Supplemental regulations.

A. The design review board may require the following structures or items to comply to the maximum extent practical and feasible with the Old World Bavarian architectural theme when they are located in any commercial zone district:

1. Street furnishings.
2. Walkways and/or plazas.
3. Garbage enclosures.
4. Kiosks.
5. Public telephone booths.

B. Meters, utility boxes, vents, louvers, conduit covers and other similar items shall be colored to blend with adjacent surfaces.

C. Serving windows to outdoor, privately owned staging areas shall be set back a minimum of eight feet from the sidewalk or public right-of-way.

D. The terms, provisions and requirements of this chapter shall be in addition to and not in lieu of the requirements set forth in the International Building Code and other

uniform codes adopted by the city or in any other ordinance, state statute or regulation governing the construction, building, zoning or other similar regulations applicable to the city.

E. The painting of a new or existing building in a color different from the color originally approved shall require approval by the design review board.

F. Buildings shall not be occupied or opened for business until the approved exterior design features of that building are finished. A temporary exemption may be granted by the design review board for not more than six months; provided, that the reason for delayed completion is due to weather or other circumstances beyond the control of the owner.

G. Rain gutters, downspouts, and heat tapes shall be required for all eaves to eliminate the possibility of drainage onto sidewalks. [Ord. 1374 § 1 (Exh. A), 2010; Ord. 1157 § 1, 2001.]

14.08.060 Small commercial buildings.

Single-story buildings, such as roadside stands, bratwurst stands, etc., that are less than 160 square feet, follow the same low-angle Bavarian-Alpine roof construction as larger buildings. They may have all wood outside wall construction. If all wood siding is used, the siding must be tongue and groove cedar, pine, or squared log construction. Usually the siding is applied horizontally. Plywood siding is unacceptable. Stucco may be used. These buildings should have extensive overhangs front and back, with more modest overhangs on the sides. Natural wood tone stains predominate in Bavaria, with little or no painting of the trim. Most of the ornate features are scrolled trim with window shutter cutouts. Roofing materials are the same as for larger buildings. The overall feeling should be rustic in nature. [Ord. 1374 § 1 (Exh. A), 2010; Ord. 1157 § 1, 2001.]

14.08.070 Mechanical equipment.

All mechanical equipment, e.g., heating and air conditioning equipment, air handling ducts, and compressors, shall be screened from view. False balconies, false chimneys, railings, and parapet walls may be utilized as long as they do not detract from the Bavarian-Alpine theme. Screening plans/ designs must be included in architectural elevations presented for board review and approval. [Ord. 1374 § 1 (Exh. A), 2010; Ord. 1157 § 1, 2001.]

14.08.080 Signs.

A. All signs must conform with the city sign ordinance.

B. Examples of approved signs are found in LMC 14.08.100(M).

C. General locations for signing is to be indicated on the design review application drawings, with evidence that flowers and other features will not interfere. [Ord. 1374 § 1 (Exh. A), 2010; Ord. 1157 § 1, 2001.]

14.08.090 Enforcement.

This chapter shall be enforced pursuant to Chapter 21.13 LMC. [Ord. 1374 § 1 (Exh. A), 2010; Ord. 1157 § 1, 2001.]

14.08.100 Appendix: Portfolio of Photographs of Old World Bavarian Architecture and Signs for the City of Leavenworth.

The community development director shall make color copies of the “Portfolio of Photographs of Old World Bavarian Architecture and Signs for the City of Leavenworth” available to the public to view. The “Portfolio of Photographs of Old World Bavarian Architecture and Signs for the City of Leavenworth,” dated January 23, 2001, is incorporated herein by this reference and is hereby adopted as part of this chapter. A monetary deposit according to the city’s adopted fee schedule shall be required to check out the portfolio of photographs. The following are included in the portfolio:

A. Typical building shapes;
B. Roofs;
C. Walls;
D. Balconies;
E. Doorways;
F. Windows;
G. Trim;
H. Decorative painting;
I. Colors;
J. Small buildings;
K. Inappropriate design elements;
L. Local Bavarian-Alpine buildings;
M. Signs;
N. Regional Bavarian-Alpine building styles and map. [Ord. 1374 § 1 (Exh. A), 2010; Ord. 1157 § 1, 2001.]

Chapter 14.10
SIGNS[1]

Sections:

14.10.010 Purpose.
14.10.020 Scope.
14.10.030 Permit required.
14.10.040 Prohibited signs.
14.10.050 Permit not required when (partially exempt signs).
14.10.060 Permit applications.
14.10.070 Wall signs standards.
14.10.080 Projecting signs standards.
14.10.090 Freestanding signs standards.
14.10.100 Building permits, structural requirements and sign maintenance.
14.10.110 Application fees.
14.10.120 Existing nonconforming signs.
14.10.130 Variance from sign code.
14.10.140 Administrative interpretation.
14.10.150 Severability.
14.10.160 Compliance and enforcement.
14.10.170 Processing – Signs in commercial zone districts.
14.10.180 Design criteria – Signs in commercial zone districts.
14.10.190 Processing and design criteria – All noncommercial zone districts.
14.10.200 Designated sign areas.
14.10.210 Definitions.

14.10.010 Purpose.

The purpose of this chapter is to promote the use of signs which are both functional and attractive in appearance through a sign regulation and permit system. This system is intended to permit such signs that will not, by their size, location, design, construction or manner of display, endanger the public safety of individuals, obstruct vision necessary for traffic safety, or otherwise endanger the public health, safety, general welfare, or the economy and business climate of the city of Leavenworth. Further, it is recognized that Leavenworth is located in a valley with outstanding natural scenic beauty, and that this resource has been enhanced by adoption of the Old World Bavarian-Alpine theme. These two assets form the basis for Leavenworth's thriving tourist industry, upon which the city's economic health and general welfare so heavily depend. Signs complementing the Old World Bavarian-Alpine theme, as provided for in this chapter, form a key and indispensable part of the overall visual attractiveness of the city, and thereby contribute both to the aesthetic and economic well-being of Leavenworth. The purpose of this chapter is also based on the goals and policies in the city's adopted comprehensive plan, which is incorporated herein by this reference. [Ord. 1397 § 1 (Exh. A), 2011.]

14.10.020 Scope.

This chapter applies within Leavenworth city limits and UGA to all existing signs and all signs erected, moved, relocated, enlarged, structurally changed, painted, or altered

after the date of adoption of the ordinance codified in this chapter. All such signs must comply with the requirements of this chapter. [Ord. 1397 § 1 (Exh. A), 2011.]

14.10.030 Permit required.

No sign governed by the provisions of this chapter shall be erected, altered or relocated by any person, firm or corporation from and after the date of adoption of the ordinance codified in this chapter without a permit issued by the city or county (as applicable) unless such sign is expressly allowed without permit. [Ord. 1397 § 1 (Exh. A), 2011.]

14.10.040 Prohibited signs.

Unless specifically allowed in this chapter it is unlawful to erect or maintain:

A. Any sign within the commercial districts, including logo signs, which are not compatible in design, lettering style, and color with the Old World Bavarian-Alpine theme. Logos of chain or franchised businesses are prohibited, but may be allowed if modified to incorporate graphics, colors, and Old World Bavarian-Alpine lettering styles as approved by the design review board;

B. Off-site signs except for political signage, campaign signs, or other protected First Amendment signs in the public forum portion of the rights-of-way or when located within designated sign areas, community bulletin boards, and signs of a public body;

C. Signs within right-of-way, except for political signage, campaign signs or other protected First Amendment signs in the public forum portion of the rights-of-way or when located within designated sign areas, community bulletin boards, and signs of a public body;

D. Signs which have moving parts, appear to move, or are designed to be moved in any way by the wind excepting analog clocks and glockenspiels;

E. Portable signs except as allowed pursuant to this chapter;

F. Banner signs, pennants on a rope, balloons, and streamers except as allowed pursuant to this chapter;

G. Neon signs, illuminated signs (except as allowed pursuant to this chapter), and signs with flashing lights (signs which are not internally illuminated shall be illuminated in conformance with Chapter 14.28 LMC, Lighting Standards);

H. Bench signs;

I. Trailer signs;

J. Vehicle signs when primarily used in a manner which constitutes signage except when located on site of the property of the business being advertised; when mandated by state or federal rules and regulations; or when parked less than eight hours off site. Contractor vehicles may be on site and/or within the construction staging area of any active construction site. No person shall move and re-park a vehicle or trailer in order to avoid a parking time limit;

K. Roof signs;

L. Billboards;

M. Signs which are plastic in appearance. Dry erase boards are prohibited. For the purposes of this prohibition, any material that may be visibly manmade in appearance (for example, plastic, vinyl, glossy, shiny, or other textures which may not be considered in the historical framework of the Old World Bavarian-Alpine theme) is considered plastic in appearance; and

N. Signs which bear or contain statements, words, or pictures which are obscene under the prevailing statutes or U.S. Supreme Court decisional law. [Ord. 1397 § 1 (Exh. A), 2011.]

14.10.050 Permit not required when (partially exempt signs).

The following types of signs and devices are exempt from the permit requirements of this chapter; provided, that any standards or conditions specified in this chapter are met; adhere to the prohibitions within LMC 14.10.040, unless otherwise provided within this section; and the signs are maintained. Temporary signs installed pursuant to this section do not have vested status and cannot become permanent installations. The city administrator or his/her designee shall be responsible for determining compliance of "signs allowed without permit." The signs must be compatible in design with the Old World Bavarian-Alpine theme unless specified herein. In determining compliance, the city administrator or his/her designee shall consider the following required provisions:

1. Compliance with size, location, and number requirements of this chapter;
2. The use of approved Old World Bavarian lettering;
3. The use of Baroque, Rococo, Classical, or Bavarian folk art elements (may be shape of sign, border, or other elements as determined by the city); and
4. The use of approved Old World Bavarian colors as determined by the design review board by resolution.

A. Menu signs; provided, that:

1. The menu displayed is the same as that given to the customers;
2. The signs are limited to two signs with a cumulative total maximum area of six square feet (except as approved for sidewalk seating);
3. The signs are within an approved enclosure;
4. Dry erase boards are prohibited;
5. Chalkboards may be used;
6. Such signs shall be exempt from wall sign calculations;
7. Such signs shall be on site and within an approved enclosure;
8. The signs must be compliant with the Old World Bavarian-Alpine theme and LMC 14.10.180; and
9. Such signs are considered temporary signs, and may be in place for the duration of the business.

B. Flags and insignia of any government, constructed and displayed in a manner which is consistent with Chapter 14.17 LMC.

C. Signs of a public body, noncommercial in nature, including, without limitation, public transit service signs, public utility information signs, traffic control signs, public warning signs, and all signs erected by a public officer in the performance of a public duty. Such signs are exempt from compliance with the Old World Bavarian-Alpine theme and LMC 14.10.180.

D. Directional signs; provided, that:

1. Such signs shall not exceed two square feet in area;
2. Such signs are limited to five per building or undeveloped lot/parking lot;
3. Such signs must be compliant with the Old World Bavarian-Alpine theme and LMC 14.10.180;
4. Directional signs may contain the name and/or logo of the business separately or combined which shall not exceed 25 percent of the directional sign area;

5. Commemorative plaques and integral signs not exceeding three square feet in area; and

6. Such signs are exempt from compliance with the Old World Bavarian-Alpine theme and LMC 14.10.180.

E. Construction signs; provided, that:

1. Only one such sign may be allowed per street frontage of a building;

2. The area of each sign shall not exceed 32 square feet;

3. The sign must be compliant with the Old World Bavarian-Alpine theme and LMC 14.10.180;

4. The signs shall be removed within 30 days of completion or occupancy of the building, whichever comes first; and

5. Such signs are considered temporary signs.

F. Political election and free speech signs; provided, that:

1. Such signs are considered temporary signs;

2. The area of individual signs shall not exceed four square feet;

3. Such signs are exempt from compliance with the Old World Bavarian-Alpine theme and LMC 14.10.180;

4. Such sign may be made of any material;

5. Such signs are allowed within right-of-way; provided, that they shall not be located on sidewalks or other traveled ways. At no time shall signs block or obstruct safe sight distance, and/or become a nuisance, hazard and/or danger to the public as determined by the public works department; and

6. Election signs shall be removed no later than 15 days after the election.

G. On-site portable signs; provided, that:

1. Such signs are considered temporary signs, and shall be allowed during business hours only;

2. The area of individual signs shall not exceed four square feet;

3. Only one sign shall be allowed per parcel or driveway entrance;

4. Dry erase boards or other materials which are plastic in appearance are prohibited. Chalkboards may be used;

5. Such signs shall be compliant with the Old World Bavarian-Alpine theme and LMC 14.10.180 when located within the commercial districts;

6. Such signs shall not block required exits or other necessary egress;

7. Such signs shall be located at street grade; and

8. Such signs shall not be placed off site or within any public right-of-way, unless within a designated sign area or within a community bulletin board in compliance with the standards provided for such location.

H. Community bulletin board structure; provided, that:

1. Such structure shall be constructed compliant with the Old World Bavarian-Alpine theme design (LMC 14.10.180);

2. Such structure shall be located within public property and may be located within a DSA;

3. Individual signs may be placed within the structure;

4. Such structure shall not exceed 12 feet in height; and

5. The area available for placement of signage shall not exceed 32 square feet.

I. Temporary “new” or “coming soon” business signs; provided, that:

1. Such signs are considered temporary signs, and shall not exceed four square feet in area;

2. Such signs must be securely affixed to the surface of a building wall or window advertising their activity or business;

3. Such signs must be compliant with the Old World Bavarian-Alpine theme and LMC 14.10.180; and

4. Such signs must be removed no later than 60 days after initial posting, unless otherwise extended by the administrative approval of the city.

J. Temporary "sale" and special product announcement signs; provided, that:

1. Such signs are considered temporary signs;

2. Such signs must be securely affixed to the surface of a building wall or window;

3. Such signs must be compliant with the Old World Bavarian-Alpine theme and LMC 14.10.180;

4. Such signs must be removed no later than 15 days after initial posting;

5. Such signs shall not be placed off site, unless within a designated sign area or within a community bulletin board in compliance with the standards provided for such location;

6. Such signs shall not be allowed at a business location more than three times per calendar year; and

7. Such signs shall not cover more than one-third of the total window space. This area shall include all other allowed window signs (including "community service event signs") for a total cumulative area not to exceed one-third the window space.

K. Temporary transient business signs; provided, that:

1. Such signs are considered temporary signs, and shall be compliant with the duration limits of the transient business license;

2. Such signs shall be reviewed and approved by the city during the process required for transient business licensing;

3. Such signage shall not exceed six square feet in area;

4. Except for the open/closed and transient business sign allowed in this chapter, no other signs shall be allowed; except as mandated by federal or state statute (for example: fireworks);

5. Such signs shall be allowed on any structure approved for use as a transient business; and

6. Such signs must be compliant with the Old World Bavarian-Alpine theme and LMC 14.10.180.

L. Incidental signs; provided, that:

1. Such signs shall not exceed a total combined area of two square feet per business;

2. All such signs must be compliant with the Old World Bavarian-Alpine theme and LMC 14.10.180;

3. Only "open/closed" and "business hours" signs may be made of a synthetic or plastic material; and

4. Such signs are considered temporary signs, and may be placed for the duration of the business.

M. Real estate and/or "open house" signs; provided, that:

1. Such sign(s) shall not be placed off site or within any public right-of-way, unless in a designated sign area or within community bulletin boards in compliance with the standards provided for such location;

2. Such sign(s) may be portable;

3. Such sign(s) shall be no greater than five square feet in area per side of sign and are limited to two sides;

4. One real estate sign may be allowed on the parcel being listed for sale;

5. The real estate and/or “open house” sign shall only be used for advertising to sell property and structures. The signs shall not be used to advertise for overnight accommodations or similar misuse;

6. Such sign shall be compliant with the Old World Bavarian-Alpine theme and LMC 14.10.180 when located within the commercial districts; and

7. Such signs are considered temporary, and must be removed seven days from the close of sale (recording and transfer of deed).

N. Special event sign; provided, that:

1. One such sign shall be allowed per vendor, and must be attached to the booth, tent, and/or concession area;

2. No portable or freestanding signs shall be allowed;

3. No internal, indirect or backlit illumination of any kind shall be allowed;

4. Such signs are considered temporary signs;

5. No sign shall exceed four square feet in area;

6. Such signs shall be compliant with the Old World Bavarian-Alpine theme and LMC 14.10.180; and

7. The sign shall be removed at the end of the event.

O. Residential development signs; provided, that:

1. The height of such sign does not exceed six feet;

2. The sign is freestanding;

3. The sign area shall not exceed 18 square feet; and

4. Such signs are only allowed within the residential districts.

P. Temporary community service event signs; provided, that:

1. Such signs are considered temporary signs;

2. The signs are installed no more than three months prior to the start of said event except when located within right-of-way;

3. The signs are removed no more than two days after the end of the event;

4. The area of the sign shall not exceed 32 square feet in area when located on private property. The allowed area of this sign is in addition to any other allowed sign area, excepting window signage;

5. Such sign shall not contain franchise logos;

6. Such sign shall be immediately removed if not maintained;

7. The sign(s) may function to direct visitors and residents to nonprofit community events and what/where services are available;

8. Such sign may be portable and off site;

9. Such sign shall conform to the standards of the designated sign area or community bulletin board when located within designated sign area or within a community bulletin board;

10. Signs allowed within right-of-way shall not exceed five square feet in area; signs allowed within right-of-way shall be located on sidewalks with greater than eight feet of width; or in location as to provide a minimum of five feet of unobstructed travel way as measured from the outer curb to the closest point (horizontally) to the sign. No more than five signs shall be allowed per 100 lineal feet of right-of-way. At no time shall signs block or obstruct safe sight distance, and/or become a nuisance, hazard and/or danger to the public as determined by the public works department. Signs within right-of-way may be installed no more than two weeks prior to the start of said event;

11. Such sign shall be compliant with the Old World Bavarian-Alpine theme and LMC 14.10.180;

12. Such signs shall not cover more than one-third of the total window space. This area shall include all other allowed window signs;

13. Such signs may be made of any material, other than plastic; and

14. Such signs shall not advertise specific business.

Q. Warning signs (see signs of a public body, subsection (C) of this section, for other warning signs); provided, that:

1. The area of the sign does not exceed two square feet and not more than one sign is placed per 50 feet of property frontage; and

2. Such signs are exempt from compliance with the Old World Bavarian-Alpine theme, quantity and size standards when required to comply with state or federal standards and specifications.

R. Private use signs; provided, that:

1. The signs are no more than two square feet in area;

2. The signs are located in a residential district on private property, in a designated sign area, or within community bulletin boards;

3. Signs shall not be posted on any utility post, traffic post or street light post;

4. Signs shall be removed the day the event or special condition ends; and

5. Such signs are considered temporary signs.

S. Signs located on the property of a residence; provided, that: the sign is noncommercial in nature and shall not exceed 10 square feet in area. Such signs are exempt from compliance with the Old World Bavarian-Alpine theme and LMC 14.10.180 when not located within the commercial districts.

T. Illuminated window signs, other than neon signs (see prohibitions); provided, that such signs are placed more than 15 feet back from the interior window surface or no less than one-half the depth of the tenant space, whichever provides the greatest distance from the window.

U. Nonilluminated window signs; provided, that such sign is placed more than three feet back from the interior window surface.

V. Neon signs; provided, that such sign is not visible from the street, alley, or sidewalk. [Ord. 1397 § 1 (Exh. A), 2011.]

14.10.060 Permit applications.

A. Application for a sign permit shall be made by the owner or tenant of the property on which the sign is to be located, or his/her authorized agent. Such application shall be made in writing on forms furnished by the city. Only fully completed applications shall be accepted by the city. If anyone other than the owner of the property is making

application for a sign, the owner's signed and dated knowledge of and consent to the application must be shown on the application.

B. The application for a sign permit shall be accompanied by the following plans and other information. A receipt of an application shall not preclude the city from requesting additional information if new information is required or a change in the proposed sign occurs:

1. The name, address and telephone number of the owner or person entitled to possession of the sign and of the sign contractor or erector.

2. The location by street address of the proposed sign/sign structure.

3. A drawing shall be on paper capable of being folded for storage in a nine-inch by 14-inch file, which shall become the property of the city. The drawing shall include the following:

a. An accurately colored drawing, to a scale appropriate for showing all detail of the sign including: all design details, lettering styles, mounting structures, location, height, width and devices. Such drawing will be an accurate "mock-up" graphic representation;

b. An accurately scaled drawing(s) of all building faces to be signed, including: building dimensions, the scaled and dimensioned outlines of all existing and proposed signs, and current photo of the building face or location;

c. An accurately scaled site plan showing the location of building(s), street(s) and sign(s) in the case of freestanding signs;

d. Accurate color representation or actual color chips;

e. Any existing and proposed sign lighting (lighting shall be compliant with Chapter 14.28 LMC); and

f. The name of the proposed lettering style along with a detailed illustration of the proposed style. [Ord. 1397 § 1 (Exh. A), 2011.]

14.10.070 Wall signs standards.

A. Wall signs may be located on any building face.

B. The maximum area for the total of all permitted wall signs shall not exceed three percent of the building face area. This shall include all window and door areas and shall be measured from the sidewalk or ground line to the building eave line. Building names, not exceeding 10 square feet, shall be approved by the design review board but are not required to be included in the allowable sign area. In addition: incidental, integral, menu, directional, and commemorative plaque signs, when not exceeding a combined total of 12 square feet in area, shall not be included in the allowed sign area.

C. Business listing signs shall incorporate consistent lettering styles, and the individual signs comprising a business listing sign shall be uniform or consistent in size, shape and design.

D. One nonilluminated wall sign shall be allowed per business property or parcel for businesses located in the residential zones.

E. Signs for businesses in residential zones shall not exceed six square feet in area.

F. One directory sign shall be allowed per building for a building containing more than one business.

G. Directory signs shall not exceed two square feet in area per business or a maximum of eight square feet in area. Such area shall not be included in the allowable sign area.

H. Signage for transient businesses shall be reviewed during the design review process required for transient businesses. Wall signage on one face shall be the only allowed signage for a transient business. Such signage shall be compatible in design with the building or structure with which it is associated, but shall not exceed six square feet in area. [Ord. 1397 § 1 (Exh. A), 2011.]

14.10.080 Projecting signs standards.

A. One projecting sign shall be allowed per business per building and shall be located in close proximity to (for example: above or beside) the public entrance for the business. The public entrance is defined as that used by the general public and not for purposes such as: staff entry, sending, receiving, emergency egress, etc. In no case shall more than one projecting sign be permitted per exterior building entrance, unless connected together as part of a projecting business listing sign.

B. Projecting signs (highway location) shall not exceed 50 square feet in area. Decorative or support structures around the sign need not be included in the sign area and shall not exceed 100 percent of the allowed sign area. Buildings allowed a highway-sized projecting sign are limited to only one such sign. The sign shall not extend over the public right-of-way.

C. Projecting signs (nonhighway location) shall not exceed five square feet in area for an individual business. The exception to this area limitation is for projecting signs which are used in place (replacing) of freestanding signs on lots with 80 percent or less lot coverage, pursuant to this chapter. The sign shall not extend from the building exterior edge more than four feet over the public right-of-way to a maximum of eight feet into public right-of-way from the building face. At no time shall any portion of a projecting sign encroach within vehicle travel ways. For the purposes of this section, the “exterior edge” may be the building walls, balconies, porticos or similar integral components of the building. “Exterior edge” shall not include flower boxes, storm doors, or similar ancillary building components. Decorative or support structures around the sign need not be included in the projection length allowed over the public right-of-way, but shall not be allowed to project further than six feet over the public right-of-way from the exterior edge of the building, and shall not exceed 200 percent of the allowed sign area.

D. The height of the top of the projecting sign shall not exceed 80 percent of the height of the building.

E. A projecting sign shall not be attached to a railing, fence, deck support, or similar type of structure, but may be hung from or attached to a balcony.

F. Business listing signs shall incorporate consistent lettering styles, each individual sign shall not exceed the area of an allowed projecting sign, and the individual signs comprising a business listing sign shall be uniform or consistent in size, shape and design.

G. Clearance under the lowest point of any sign which projects out over a public right-of-way (if allowed) shall not be less than eight feet.

H. One nonilluminated projecting sign shall be allowed per business property or parcel for businesses located in the residential zones. Any such sign shall not project over public rights-of-way, shall not obstruct internal walkways, and shall not be placed in areas where a vehicle driver’s visibility (intersections, alleys, driveways) might be obscured.

I. Signs for businesses in residential zones shall not exceed six square feet in area. [Ord. 1397 § 1 (Exh. A), 2011.]

14.10.090 Freestanding signs standards.

A. Buildings which are located more than 10 feet behind the front or side property line (in the case of through lots, rear) may have a single freestanding sign. This sign shall not project over public rights-of-way, shall not obstruct internal walkways, and shall not be placed in areas where a vehicle driver's visibility (intersections, alleys, driveways) might be obscured. Only one freestanding sign shall be allowed per business property or parcel; provided, however, that two freestanding signs shall be allowed on parcels two acres or more in size if, in addition to those requirements already noted, all the following conditions are met:

1. There shall be at least a total of 230 linear feet of frontage on two streets (alleys not included);

2. There must be a vehicle ingress or egress for each freestanding sign, per street frontage; and

3. Only one freestanding sign shall be allowed per street frontage, and such sign shall be placed in close proximity to the required vehicle ingress or egress.

B. Freestanding signs (highway location) shall not exceed 50 square feet in area; shall not exceed 15 feet in height; and shall not extend over the public right-of-way.

C. Freestanding signs (nonhighway location) shall not exceed 32 square feet in area; shall not exceed 12 feet in height; and shall not extend over the public right-of-way.

D. When a business requires a drive-through and the main floor area of the structure that the business is located in exceeds 1,000 square feet, a drive-through menu board sign may be installed. The sign shall be constructed of any material allowed by this code. However, a clear, rigid cover may be installed to cover the sign to provide security and protection from the weather. Lighting of the sign must comply with the requirements of this code. A best effort shall be made to screen the menu board sign from residential and public right-of-way properties as to view, lighting, and sound. The drive-through menu board sign shall be allowed in addition to any other freestanding or projecting signs allowed pursuant to this code. The menu board sign shall not project over public rights-of-way, shall not obstruct internal walkways, and shall not be placed in areas where a vehicle driver's visibility (intersections, alleys, driveways) might be obscured.

E. Drive-through menu board signs shall not exceed 25 square feet in area. This sign area is in addition to that allowed in other sections of this chapter.

F. Drive-through menu board signs shall not exceed eight feet in height and shall not extend over the public right-of-way.

G. Buildings allowed a freestanding sign may also have projecting sign(s); provided, that the area and number of such projecting sign(s) meet the standards within LMC 14.10.080.

H. A freestanding sign may be a business listing sign, or have multiple businesses. Business listing signs shall incorporate consistent lettering styles, and the individual signs comprising a business listing sign shall be uniform or consistent in size, shape and design. The total area of all signs within the business listing sign structure shall be as allowed within this section.

I. One nonilluminated freestanding sign shall be allowed per business property or parcel for businesses located in the residential zones. Any such sign shall not project

over public rights-of-way, shall not obstruct internal walkways, and shall not be placed in areas where a vehicle driver's visibility (intersections, alleys, driveways) might be obscured.

J. Freestanding signs for businesses in residential zones shall not exceed four feet in height and shall not extend over the public right-of-way.

K. Signs for businesses in residential zones shall not exceed six square feet in area. [Ord. 1397 § 1 (Exh. A), 2011.]

14.10.100 Building permits, structural requirements and sign maintenance.

All signs shall conform with the following permitting, structural and maintenance requirements:

A. Permits shall be applied for and obtained if required by the International Construction Codes, as amended by Washington State and the city of Leavenworth.

B. Plans for projecting signs with a surface area exceeding 20 square feet shall be prepared by a Washington State licensed architect or engineer.

C. Wiring for indirectly lighted signs shall be installed in accordance with the state electrical code.

D. Sign Maintenance. All signs must be kept in good repair and in a safe manner at all times. The property owner or sign owner (if different than the property owner) must repair damaged or deteriorated signs within 60 days of notification by the city. The area surrounding freestanding signs must be kept free of litter and debris at all times. Signs not repaired within the allowed 60 days shall be considered abandoned signs. [Ord. 1397 § 1 (Exh. A), 2011.]

14.10.110 Application fees.

The city council shall establish by resolution a schedule of fees, charges and expenses for permits, applications and other matters pertaining to this title related to sign permits. Until all applicable fees, charges and expenses have been paid in full, no action shall be taken by the city on any application, appeal or request. There is no vested right to fees, charges, or expenses. [Ord. 1397 § 1 (Exh. A), 2011.]

14.10.120 Existing nonconforming signs.

Existing nonconforming signs as defined in this chapter are permitted, but shall be removed or brought into compliance with this chapter, as amended, any time the basic design, size, color or structure of the sign is altered, unless the proposed alteration renders the sign more in compliance with this chapter and the cost of the alteration of a freestanding sign or highway projecting sign is less than 50 percent of the replacement value of the sign. Signs damaged or altered, in any manner, by more than 50 percent of their replacement value shall be replaced with a sign that meets the requirements of this chapter as amended and in effect at the time of the requested replacement. Notwithstanding the foregoing, existing nonconforming signs shall be brought into compliance with this code no later than March 15, 2030. The hearing examiner shall review and make decisions on appeals alleging an error in a decision of a city official in the interpretation or the enforcement of the zoning code or any other development regulation.

The burden of establishing that any nonconformity is a legal nonconformity as defined herein shall, in all cases, be upon the owner of such alleged nonconformity and not

upon the city. Determination of the nonconforming status of a sign is an administrative function of the city administrator and/or his/her designee. Property owners asserting existing nonconforming status shall submit such information as the city administrator and/or his/her designee deems necessary to substantiate or document the claim to the existing nonconformance. Documentation submitted by the property owner must ascertain the date the nonconformity was established and that it conformed to the applicable development regulations in effect at that time. Documentation may consist of such historical items. Unsubstantiated anecdotal evidence cannot be accepted for the determination of existing nonconforming status. [Ord. 1397 § 1 (Exh. A), 2011.]

14.10.130 Variance from sign code.

Any person aggrieved by the standards or requirements of this chapter may seek a variance as provided herein. Any standard or requirement in this chapter, except prohibited standards or design criteria, shall be subject to the variance standards and processes set forth in LMC Title 18 or 21. [Ord. 1397 § 1 (Exh. A), 2011.]

14.10.140 Administrative interpretation.

Administrative interpretations of this chapter shall be made by the city administrator or his/her designee pursuant to Chapter 21.03 LMC. [Ord. 1397 § 1 (Exh. A), 2011.]

14.10.150 Severability.

If any section, subsection, sentence, clause, or phrase of this chapter is, for any reason, held to be invalid or unconstitutional, such invalidity or unconstitutionality shall not affect the validity or constitutionality of the remaining portions of this chapter. [Ord. 1397 § 1 (Exh. A), 2011.]

14.10.160 Compliance and enforcement.

The following penalties and remedies are in addition to the enforcement provisions established in Chapter 21.13 LMC. Any violation of this sign code shall constitute a public nuisance per se.

A. Compliance with Other Applicable Codes. All signs erected or altered under this chapter must comply with all applicable federal, state and local regulations relating to signs, including, without limitation, the provisions of the building code. If any provision of this code is found to be in conflict with any provision of any zoning, building, fire, safety or health ordinance or code of the city, the provision which establishes the higher standard shall prevail.

B. Immediate Removal of Signs. All signs located within public rights-of-way or on public utility poles, traffic sign poles, sidewalks or other public property and private use signs located in the commercial zones except as allowed within this chapter or signs that present an immediate and serious danger to the public shall be considered a nuisance and may be immediately removed by the city. All signs removed by the city shall be available for recovery by the owner of such sign for a period of two weeks, after which they will be destroyed. The city shall not be responsible for damages or loss during removal or storage of any signs. Exception: Temporary signs printed on paper or other nondurable material may not be available for recovery by the owner.

C. All signs located within the city which do not conform to the provisions of this chapter, except “existing nonconforming signs” as defined in this chapter, are unlawful

and shall be removed within 30 days of the effective date of the ordinance codified in this chapter.

D. Any unlawful sign which has not been removed within 15 days after imposition of civil penalty under LMC Title 21 may be removed by the city and the costs charged to the person violating this chapter. If removal costs have not been paid and the sign reclaimed within 30 days of its removal by the city, the city shall be entitled to file with the county auditor a lien against the real estate on which the sign was located to secure repayment of such costs and expenses of removal by the city. The lien may be foreclosed in the manner provided by Washington law for the foreclosure of labor and material liens. The city may sell or otherwise dispose of the sign so removed and apply the proceeds toward costs of removal. Any proceeds in excess of removal costs shall be paid to the owner of the sign.

E. Abandoned signs as defined in this chapter may be removed by the city and the cost of removal shall be paid by the owner of the sign and shall be a lien on the real estate from which the abandoned sign was removed subject to the same provisions for foreclosure of the lien as provided in subsection (D) of this section.

F. By the act of construction or installation of signs allowed or permitted within public right-of-way, the recipient of such permit or approval agrees to indemnify, defend, and hold harmless the city of Leavenworth from any claim, action, liability, loss, damage or suit arising from the issuance of permit and/or allowance of signs within public right-of-way.

G. Continued Duty to Correct. Payment of a monetary penalty pursuant to city code does not relieve a person of the duty to correct the violation.

H. Attorney Fees. In any action brought by the city to enforce this chapter or in any action brought by any other person in which the city is joined as a party challenging this chapter, in the event the city is a prevailing party, then the nonprevailing party challenging the provisions of this chapter or the party against whom this chapter is enforced in such action shall pay, in addition to the city's costs, all reasonable attorney's fees, costs, and expenses incurred in abating the violation or securing full compliance with this chapter as well as at any hearing, trial or appeal relating to securing such compliance. [Ord. 1397 § 1 (Exh. A), 2011.]

14.10.170 Processing – Signs in commercial zone districts.

A. The city administrator or his/her designee shall be responsible for determining compliance of "signs allowed without permit." The signs must be compatible in design with the Old World Bavarian-Alpine theme unless specified herein. In determining compliance, the city administrator or his/her designee shall consider the following required provisions:

1. Compliance with size, location, and number requirements of this chapter;
2. The use of approved Old World Bavarian lettering;
3. The use of Baroque, Rococo, Classical, or Bavarian folk art elements (may be shape of sign, border, or other elements as determined by the city); and
4. The use of approved Old World Bavarian colors as determined by the design review board by resolution.

B. Prior to transmittal to the city of Leavenworth design review board, the city administrator or his/her designee shall prepare a report which verifies that the application is complete and compliant with the applicable sections of the code regarding

sign location, dimension, size and other applicable technical standards and specifications outside of Old World Bavarian-Alpine theme.

C. The design review board shall be responsible for review and approval, approval with conditions, or denial of all sign permits in the commercial zone districts, except as otherwise provided in this chapter.

D. Each sign permit application shall be filed with the city at least 10 days prior to a regular meeting of the design review board to be considered at such meeting.

E. In the event the permit application is denied by the design review board, and the applicant alleges an error was made in the decision, the applicant may appeal to the hearing examiner as provided for in Chapter 21.11 LMC. Such appeal is a prerequisite to filing a lawsuit challenging the regulation or the decision of the design review board.

F. No sign permit application shall be reviewed by the design review board for a sign which has been erected or otherwise put in use after the effective date of the ordinance codified in this chapter without a permit having been first obtained, until such sign is removed or the use discontinued pending review.

G. Changes in an approved sign size or design shall not be made without first obtaining a new permit. Lettering or verbiage changes which are the same lettering style and color, and changes in location of a previously approved sign, may be approved by the city administrator or his/her designee without obtaining approval of the design review board; however, application materials for an administrative permit approval shall be submitted to the city to approve, approve with conditions, or deny the change and to create a record of this administrative decision. The city may forward the permit to the design review board at its discretion.

H. Individual signs in an approved directory or business listing sign may be added, moved, or substituted with signs for new businesses or uses with approval by the city administrator or his/her designee without obtaining a new permit; provided, that the sign design, size, letter style and color are identical to the sign being replaced in the business listing sign and the provisions of the original permit are met. [Ord. 1397 § 1 (Exh. A), 2011.]

14.10.180 Design criteria – Signs in commercial zone districts.

A. For signs requiring a permit, the design review board shall consider the proposed general design, lettering, arrangement, size, texture, materials, colors, lighting, and placement of the proposed sign in relation to other signs and other structures on the premises and contiguous area, in keeping with the intent of this chapter and the Old World Bavarian-Alpine theme.

B. All signs permitted within the commercial zoning districts of the city shall conform to the following design criteria, unless otherwise provided for in this chapter:

1. Signs shall be compatible in design and color with the Old World Bavarian-Alpine theme and with the buildings and uses with which they are associated. Signage shall include Baroque, Rococo, Classical, or Bavarian folk art graphics. Sign design shall conform with examples shown in the booklet of photographs entitled “Portfolio of Photographs of Old World Bavarian Architecture and Signs for the City of Leavenworth” referred to in LMC 14.08.100 or as approved by the design review board. This booklet is available for review at no cost at City Hall during normal business hours.

2. The styles of lettering, as illustrated in the booklet entitled “Sign Lettering Styles for the Bavarian Village of Leavenworth,” shall be required unless other Old

World Bavarian lettering is approved by the design review board either by resolution or as a specific motion of the board. Block lettering shall be allowed for a drive-through menu board sign only. This booklet is available for review at no cost at City Hall during normal business hours.

3. Signs illuminated by spotlights or indirect lighting shall be lighted in such a manner that glare from the light source is not visible to pedestrian or vehicular traffic on adjacent public rights-of-way. The lighting of the sign shall be an integral part of the design of the sign and shall be approved by the design review board.

4. Signs may only contain graphics, colors, and Old World Bavarian-Alpine lettering styles. Logos of chain or franchised businesses are prohibited on signs, but may be allowed if modified to incorporate graphics, colors, and Old World Bavarian-Alpine lettering styles. Signs may contain and shall not be denied for containing phone numbers and website addresses. [Ord. 1397 § 1 (Exh. A), 2011.]

14.10.190 Processing and design criteria – All noncommercial zone districts.

A. The city administrator or his/her designee shall be responsible for review and approval, approval with conditions, or denial of all sign permits in the noncommercial zone districts, except as otherwise provided in this chapter.

B. Each sign permit application shall be filed with the city and processed in accordance with the requirements of LMC 21.09.030, Limited administrative review of applications.

C. In the event the permit application is denied and the applicant alleges an error was made in the decision, the applicant may appeal to the hearing examiner as provided for in Chapter 21.11 LMC. Such appeal is a prerequisite to filing a lawsuit challenging the regulation or the decision of the community development department.

D. No sign permit application shall be reviewed for a sign which has been erected or otherwise put in use after the effective date of the ordinance codified in this chapter without a permit having been first obtained, until such sign is removed or the use discontinued pending review.

All signs permitted within the noncommercial zone districts of the city shall conform with the following criterion, unless otherwise provided for in this chapter:

E. Signs illuminated by spotlights or indirect lighting shall be lighted in such a manner that glare from the light source is not visible to pedestrian or vehicular traffic on adjacent public rights-of-way. The lighting of the sign shall be an integral part of the design of the sign and shall be approved as part of the administrative review process. [Ord. 1397 § 1 (Exh. A), 2011.]

14.10.200 Designated sign areas.

As established by city council resolution, the designated sign areas (DSAs) allow for signs which may be off site as described within LMC 14.10.050.

The following standards and requirements shall be required for all signs within the DSA:

A. Permits are not required prior to installation of the sign; however, the sign owner shall write the month/day/year of installation on the sign;

B. No more than one sign per event, sale, and other type of use or expression shall be allowed per designated sign area;

C. Signs may be either sandwich-board (A-frame) style, hanging signs, or post-mounted;

D. Sign area is limited to five square feet per side of the sign and each sign is limited to two sides;

E. The signs shall be made of plastic, wood, metal, or paper;

F. Such signs are exempt from compliance with the Old World Bavarian-Alpine theme;

G. The top of the signs and mounting structure shall not exceed four feet in height, unless attached to a city-installed sign post or community bulletin board;

H. The signs shall be removed within 24 hours of the end of the event which they are advertising and may be installed up to 10 days in advance of the event except as allowed by LMC 14.10.050(P). Political free speech signs can be posted for a total of 15 days;

I. Signs installed pursuant to this section do not have vested status and cannot become permanent installations;

J. The city shall remove signs without notice which are not compliant with this section and this chapter and also those signs for which their allowed period of posting has expired. The city will store the sign for 14 calendar days after the day the sign was removed at the City Public Works Maintenance Shop; and

K. Signs which bear or contain statements, words or pictures which are obscene under the prevailing statutes or U.S. Supreme Court decisional law are prohibited. [Ord. 1397 § 1 (Exh. A), 2011.]

14.10.210 Definitions.

For purposes of this chapter, the following terms, phrases, words and their derivatives shall be construed as specified in this section:

A. “Abandoned sign” means any sign and/or sign structure which represents or displays any reference to a business or use which has been discontinued for 90 or more consecutive days or for which no valid business license is in effect in the city. “Abandoned sign” shall also mean any sign remaining in place after a sign has not been maintained for a period of 60 or more consecutive days after notification of such by the city.

B. “Area” or “sign area” means, for regularly shaped signs, the simple area of the sign. For irregularly shaped signs, the area shall be that of the rectangle, triangle or circle (whichever is smaller), or logical outer boundary of a polygon which will wholly contain the sign; provided, that the outer boundary of the polygon does not protrude beyond the sign as determined by the city administrator, or his/her designee. The structure supporting a sign shall not be included in determining the area of the sign unless the structure is designed in a way to form an integral background for the display. In the case of a wall mural incorporating commercial wording, the sign area includes only the portion of the mural which contains the wording circumscribed as set forth in this definition. In the case of double-sided signs, erected in a manner so that the display surfaces are placed directly back to back to one another, the area of one side is that which is used to calculate the allowed area of a sign, provided the surfaces are identical in size, color and design. In the case of business listing signs, each business sign area shall be calculated separately, and compiled for a total area excluding clearly defined spacing and/or gaps.

C. “Balloon” means a flexible bag designed to be inflated with hot air or with a gas, and a bag shaped like a figure or object when inflated.

D. “Building face” means the outer surface of any building which is visible from any private or public street, highway or alley. For the purposes of building wall calculations, where multiple walls differ in outer edge plane, the secondary planes, corners, and/or angles shall be incorporated into the primary building elevation, and shall not be calculated independently, or as a secondary building elevation.

E. “Commercial” means any activity carried on for a financial gain or a business endeavor.

F. “Community service event” or “civic event” means an event (e.g., festival, parking, fun run and/or meeting) sponsored by or for the benefit of a nonprofit organization.

G. “Design review board” means the board created by Ordinance 983 (Chapter 2.38 LMC), as amended.

H. “Eave line” means the juncture of the roof and the perimeter wall of the structure.

I. “Erect” means to build, construct, attach, place, affix, raise, assemble, create, paint, draw or in any other way bring into being or establish.

J. “Height” (of a freestanding sign) means the vertical distance measured from the highest point of the sign structure to the grade of the adjacent street or the surface grade at any point beneath the sign, whichever provides the lowest elevation.

K. “Maintained” means not broken, torn or ripped, securely attached or affixed to the supporting structure, clean in appearance, without chipped, faded or peeling paint, or otherwise in a condition a reasonable person would deem in “good condition.”

L. “Maintenance” means the cleaning, painting and minor repair of a sign or any support for or attachment of a sign in a manner that does not alter the basic design, size, color or structure of the sign.

M. “Nonprofit organization” means an organization licensed by the state of Washington pursuant to RCW Title 24.

N. “Sign” means a communication device, structure, or fixture which incorporates graphics, symbols, or written copy that is intended to promote the sale of a product, commodity or service, or provide direction or identification for a premises, business, or facility. “Sign” does not include actual unpriced stock in trade on display and available for sale. “Sign” includes all structural members and, without limitation, the following types of signs:

1. “Banner sign” means any sign intended to be hung, with or without framing, and possessing characters, letters, illustrations or ornamentations applied to fabric or any nonrigid material, such as paper. Flags, governmental insignias, awning signs, and temporary signs, treated elsewhere in this chapter, shall not be considered banner signs.

2. “Bench sign” means a sign located on any part of the surface of a bench or seat placed on or adjacent to a public right-of-way. A bench sign does not include those components of a bench which are commemorative or information plaques, not used for commercial purposes.

3. “Billboard signs” means a freestanding sign without the on-site business name and information and/or off-site advertisement.

4. “Business listing sign” means a sign in which the names of the occupants of a building are given and displayed in columns and/or rows.

5. “Commemorative plaque” means a memorial plaque or plate, with engraved or case lettering, which is permanently affixed to or near the structure or object it is intended to commemorate.

6. “Community bulletin board” or “kiosk” means a freestanding structure or wall structure which includes a surface intended for the posting of messages, for example, announce events, sales, or provide information. Such structure shall only be established by the city of Leavenworth.

7. “Construction sign” means any sign giving the name or names of principal contractors, architects and lending institutions responsible for construction on the site where the sign is placed, together with other information included thereon.

8. “Directional sign” means a sign giving directions, instructions or facility information (e.g., parking, exit or entrance signs).

9. “Directory sign” means a sign on which the names and locations of occupants or the use or uses of a building are listed on a building diagram attached to the wall of the building.

10. “Drive-through menu board sign” means a freestanding or wall sign used for establishments to display their menu items and prices. The establishment shall have and maintain provision for automotive drive-through customers in order to be eligible for a drive-through menu board sign.

11. “Existing nonconforming sign” means any sign located within the city limits on the date of adoption or amendment of the ordinance codified in this chapter, which does not conform with the provisions of this chapter, as amended, but which did conform to all applicable laws in effect on the date the sign was erected. Existing nonconforming signs shall not include temporary signs.

12. “Freestanding sign” means a sign, not attached to any building or similar type of structure, which is securely and permanently attached to the ground.

13. “Illuminated sign” means any sign internally illuminated, in any manner, by an artificial light source, including all signs lit with neon tubes, either directly or indirectly. Such illuminated signs include, but are not limited to: television screens, monitors (computer or otherwise sourced), back-lit canopies, internally illuminated channel letters, acrylic formed faces and other types of directly or indirectly illuminated signs.

14. “Incidental sign” means a sign, emblem, or decal informing the public of the property address, business hours, facilities or services available on the premises (e.g., open/closed signs, restroom signs and bank card signs).

15. “Integral sign” means any memorial sign, tablet, name or date of erection of a building when cut into any masonry surface or when constructed of bronze or other incombustible material mounted on the face of a building.

16. “Logo sign” means a sign bearing characters, letters, symbols, or characteristic design which, through trademark status or consistent usage, has become the customary identification for a business.

17. “Menu sign” or “menu board sign” means a sign displaying the food products and prices provided by the eating and drinking establishment.

18. “Noncommercial sign” means a sign that bears only property address numbers, postal box numbers or names of occupants of premises.

19. “Off-site sign” means a sign which directs attention to a business, profession, product, activity or service which is not conducted, sold or offered on the premises or at the location where the sign is located.

20. “Political election sign” means a temporary sign advertising a candidate or candidates for public elective office, or a political party, or signs urging a particular vote on a public issue decided by ballot in connection with local, state or national election or referendum.

21. “Political free speech sign” means a temporary sign expressing an opinion on a public, social, or ballot issue.

22. “Portable sign” means any mobile, movable sign or sign structure, such as a sandwich-board sign (A-frame sign), which is not securely attached to the ground or any other structure.

23. “Private use sign” means a temporary sign announcing an event, use or condition of personal concern, nonbusiness in nature, including, without limitation, “garage sale” or “lost animal” signs.

24. “Projecting sign” means any sign affixed to any building or wall, the leading edge of which extends beyond such building or wall.

25. “Real estate sign” means any sign which is used to offer property for sale, lease or rent.

26. “Residential development sign” means a sign identifying a recognized subdivision, condominium complex or residential development.

27. “Roof sign” means any sign erected or constructed wholly upon and over the roof of any building or structure; provided, however, that a sign on the surface of a canopy shall be regarded as a projecting or wall sign.

28. “Special event sign” means individual temporary booth, tent, or vendor sign allowed for a special event or festival.

29. “Temporary community service event sign” means a sign for the purpose of “community service event” or “civic event.”

30. “Temporary sign” means a sign not constructed or intended for long-term use. For the purposes of this definition, a temporary sign may not be in place greater than 24 hours, unless specifically allowed a greater duration by this chapter. Temporary signs installed pursuant to this title do not have vested status and cannot become permanent installations.

31. “Trailer sign” means any sign mounted, painted, or attached through some other method on a vehicle normally licensed by the state as a trailer and used for advertising or promotional purposes.

32. “Vehicle signs” means advertisement or graphics intended to advertise business affixed to a vehicle.

33. “Wall sign” means any sign painted on or attached to and erected and confined within the limits of the outside wall of any building and supported by such wall or building and which displays only one advertising surface. Awning, canopy, and window (for the purposes of this definition, the window area is not calculated for temporary “sale” and “special product announcements” signs) signs are considered wall signs for the purposes of this definition. In addition, single-sided signs located parallel to the building wall, in the same building elevation, and separated from the wall are considered wall signs for the purposes of this definition.

34. “Warning sign” means any sign which is intended to warn persons of danger or prohibited activities such as “no trespassing,” “no hunting,” “flammable,” and “no dumping.”

35. “Window sign” means any sign placed upon the interior or exterior surface of a window or placed inside the structure and oriented so as to be readable or readily recognized on the adjacent street or sidewalk. For the purposes of this definition, a window sign is a part of the building wall or elevation unless a temporary “sale” and “special product announcements” sign. [Ord. 1397 § 1 (Exh. A), 2011.]

Chapter 14.12
OFF-STREET LOADING AND PARKING[1]

Sections:

Article I. Requirements Generally

14.12.010 Purpose.
14.12.020 Applicability.
14.12.030 Compliance required – Owner's responsibility.
14.12.040 Change of use – Effect.
14.12.050 Requirements for other uses – Authority.
14.12.060 Requirements – Where more than one use.
14.12.070 Joint use permitted when.
14.12.080 Plan required.

Article II. Off-Street Loading

14.12.090 Required when – Number of berths.
14.12.100 Berth size.
14.12.105 Berth location.
14.12.110 Elimination prohibited when.

Article III. Off-Street Parking

14.12.120 Required when.
14.12.130 Elimination prohibited when.
14.12.140 Area measurements.
14.12.150 Number of spaces required.
14.12.160 Location requirements.
14.12.165 Electric vehicle charging station spaces.
14.12.170 Lot – Design requirements.
14.12.180 Underground parking – Design requirements.
14.12.185 Underground parking facility in the multifamily zone district to provide parking for a commercial zone district.
14.12.190 Landscaping requirements.

Article I. Requirements Generally

14.12.010 Purpose.

It is the purpose of this chapter to assure an adequate number of off-street parking and loading spaces are provided within the city, and to provide adequate vehicular and pedestrian/bicycle ingress, egress, and loading facilities that will reduce on-street parking, increase traffic safety, maintain smooth traffic flow, and reduce the visual impact of parking lots. Further, it is the intent of this chapter to ensure that off-street parking and loading facilities are designed in a manner that will ensure efficiency, protect public safety, and where appropriate, protect surrounding land uses from adverse impacts. [Ord. 1373 § 1 (Exh. A), 2010; Ord. 1146 (Exh. A), 2000.]

14.12.020 Applicability.

This chapter shall apply to all developments, land use activities and permit applications undertaken in compliance with this title and LMC Titles 15, 16, 17 and 18, as well as any applicable activities governed by the city shoreline master program. [Ord. 1373 § 1 (Exh. A), 2010; Ord. 1146 (Exh. A), 2000.]

14.12.030 Compliance required – Owner's responsibility.

The provision and maintenance of off-street parking and loading spaces are continuing obligations of the property owner. No development, land use, and/or building permit shall be issued until compliance with the provisions contained herein is reviewed and approved by the community development director. The subsequent occupancy and/or use of buildings, structures, and property for which a permit is issued shall be conditional upon the unqualified continuance and availability of the amount of parking and loading space required by this chapter. Use of property in violation hereof shall be a violation of this chapter, subject to the enforcement provisions found in LMC Title 21. Underground parking facilities which are shared between commercial and multifamily zone districts and paid parking facilities in commercial zone districts that do not solely support a use on site shall be subject to the conditional use permit process outlined in Chapter 18.52 LMC. Parking facilities which support a use on site shall be allowed outright subject to review and approval for compliance with the requirements of this chapter. If a parking facility is a stand-alone project and is not being reviewed in conjunction with a building permit, the city may require submission of a separate application and fees per the city's fee schedule. This application will be subject to review and approval through the limited administrative review process. [Ord. 1373 § 1 (Exh. A), 2010; Ord. 1146 (Exh. A), 2000.]

14.12.040 Change of use – Effect.

Should the owner or occupant of a lot or building change the use to which the lot or building is put, thereby increasing off-street parking or loading requirements, it is unlawful and a violation of this title to begin or maintain such altered use until the required increase in off-street parking or loading is provided. [Ord. 1373 § 1 (Exh. A), 2010; Ord. 1146 (Exh. A), 2000.]

14.12.050 Requirements for other uses – Authority.

Off-street parking and loading requirements for types of buildings and uses not specifically listed in this chapter shall be determined by the community development director, based upon the requirements of comparable uses listed. [Ord. 1373 § 1 (Exh. A), 2010; Ord. 1146 (Exh. A), 2000.]

14.12.060 Requirements – Where more than one use.

In the event several uses occupy a single structure or parcel of land, the total requirements for off-street parking and loading shall be the sum of the requirements of the several land uses computed separately. Off-street parking and loading facilities for one use shall not be considered as providing required facilities for any other use. [Ord. 1373 § 1 (Exh. A), 2010; Ord. 1146 (Exh. A), 2000.]

14.12.070 Joint use permitted when.

Owners of two or more uses, structures or parcels of land may agree to use jointly the same parking and loading spaces where the hours of operation do not overlap, provided substantial proof is presented to the community development director pertaining to the cooperative use of the parking facilities. [Ord. 1373 § 1 (Exh. A), 2010; Ord. 1146 (Exh. A), 2000.]

14.12.080 Plan required.

A plan, drawn to scale, indicating how the off-street parking and loading requirements are to be fulfilled shall accompany a request for a building permit. [Ord. 1373 § 1 (Exh. A), 2010; Ord. 1146 (Exh. A), 2000.]

Article II. Off-Street Loading

14.12.090 Required when – Number of berths.

For each use for which a building is to be erected or structurally altered to the extent of increasing the floor area to equal the minimum floor area required to provide loading space, and which will require the receipt or distribution of materials or merchandise by truck or similar vehicle, there shall be provided off-street loading space on the basis of minimum requirements as follows:

A. Commercial, industrial and public utility uses which have a gross floor area of 5,000 square feet or more shall provide truck loading or unloading berths in accordance with the following table:

Square Feet of Floor Area	Number of Berths Required
5,000 – 30,000	1
30,001 – 100,000	2
100,001 and over	3

B. Office buildings, hotels, motels, hospitals, institutions, schools, public buildings, recreational or entertainment facilities, and any similar uses which have a gross floor area of 30,000 square feet or more shall provide off-street loading or unloading berths in accordance with the following table:

Square Feet of Floor Area	Number of Berths Required
30,000 – 100,000	1
100,001 and over	2

C. Within the central commercial zoning district, where a structure and/or use less than 30,000 square feet in size is required to provide off-street loading and it is adjacent to an existing alley, said alley may be used to fulfill the off-street loading space. [Ord. 1373 § 1 (Exh. A), 2010; Ord. 1146 (Exh. A), 2000.]

14.12.100 Berth size.

A loading berth shall contain space at least 10 feet wide, 50 feet long and have a height clearance of at least 14 feet. [Ord. 1373 § 1 (Exh. A), 2010; Ord. 1146 (Exh. A), 2000.]

14.12.105 Berth location.

Uses with an average of one delivery truck a day or less (not including UPS, FedEx or similar delivery trucks) shall provide a berth area in compliance with other requirements of this chapter; however, the berth area is not required to be physically demarcated as a loading/unloading only area and may be used for multiple purposes so long as the functionality of the berth as a loading/unloading area is maintained.

Berth areas, whether physically demarcated or not, shall meet the requirements/intent of the fire code, shall not block parking, shall not impact traffic circulation in a negative manner, shall not impact adjacent properties in a negative manner, and shall not intrude into street rights-of-way. [Ord. 1373 § 1 (Exh. A), 2010; Ord. 1268 (Exh. D), 2005.]

14.12.110 Elimination prohibited when.

If loading space has been provided in connection with an existing use, the loading space shall not be eliminated if elimination would result in less space than is required to adequately handle the needs of the particular use, according to the standards set out in LMC 14.12.090 and 14.12.100. [Ord. 1373 § 1 (Exh. A), 2010; Ord. 1146 (Exh. A), 2000.]

Article III. Off-Street Parking

14.12.120 Required when.

In all districts, except the central commercial district, for each new structure or use of each structure or use increased in area 50 percent or more and for each change in the use of an existing structure, there shall be provided and maintained off-street parking facilities in conformance with the provisions of this chapter; provided, however, that in the central commercial district, hotels, motels, bed and breakfasts, apartments and condominiums shall provide off-street parking on a ratio of one parking space per guest room, suite or dwelling unit, as the case may be. Off-street parking requirements, as contained in this chapter, shall also be mandatory for any new development in the central commercial district that is greater than 10,000 square feet in size. [Ord. 1373 § 1 (Exh. A), 2010; Ord. 1146 (Exh. A), 2000.]

14.12.130 Elimination prohibited when.

If parking space has been provided in connection with an existing use or is added to an existing use, the parking space shall not be eliminated if elimination would result in less space than required by this chapter. [Ord. 1373 § 1 (Exh. A), 2010; Ord. 1146 (Exh. A), 2000.]

14.12.140 Area measurements.

Where square feet are specified, the area measure shall be the gross floor area primary to the functioning of the particular use of property but shall exclude space devoted to off-street parking or loading. [Ord. 1373 § 1 (Exh. A), 2010; Ord. 1146 (Exh. A), 2000.]

14.12.150 Number of spaces required.

Standards for off-street parking shall be as follows:

A. Residential.

1. Single-, two- and multifamily dwellings, one space per dwelling unit;
2. Boardinghouse, lodging or roominghouse, two spaces per three guest accommodations plus one additional space for the owner or manager;
3. Manufactured home park, two spaces per manufactured home.

B. Hotel or Motel.

1. Hotel, one space per guest room or suite;
2. Motel or resort, one space per guest room or suite.

C. Institutional.

1. Welfare or correctional institution, sanitarium, nursing home, retirement home, rest home or convalescent home, one space per five beds for patients or inmates;
2. Hospital, one space per bed.

D. Places of Public Assembly.

1. Church, one space per four seats or eight feet of bench length in the main auditorium;
2. Library, reading room, museum, art gallery, one space per 500 square feet of floor area;
3. Preschool, nursery, day nursery, kindergarten, two spaces per teacher or adult supervisor;
4. Elementary or junior high school, three spaces per classroom;
5. High school or college, four spaces per classroom;
6. Auditorium, gymnasium, club, lodge hall, or other place of public assembly, one space per four seats or eight feet of bench length.

E. Commercial Amusement.

1. Stadium, arena, theater, one space per four seats or eight feet of bench length;
2. Bowling alley, two spaces per alley;
3. Dance hall, skating rink, one space per 100 square feet of floor space;
4. Outdoor commercial amusement enterprise (except golf course and drive-in theater), one space per 300 square feet of ground area;
5. Archery club, gun club, tennis club, swimming club, or similar athletic club, one space per 100 square feet of floor area in clubhouse or 300 square feet of ground area, whichever requirement is greater;
6. Golf course, one space per 100 yards in length of the course plus one space per 500 square feet in the clubhouse.

F. Commercial.

1. Retail store (except as provided in subsection (F)(2) of this section), one space per 500 square feet of floor space;
2. Retail store exclusively handling bulky merchandise such as automobiles or furniture, one space per 3,000 square feet of floor area;
3. Service or repair shop, one space per 600 square feet of floor area;
4. Bank, office (except medical or dental), one space per 300 square feet of floor area;
5. Medical or dental office, one space per 200 square feet of floor area;

6. Mortuary, one space per four seats or eight feet of bench length in chapels;
7. Eating or drinking establishments, one space per four seats;
8. Open air market, used car sales lot, one space per 1,500 square feet of land area.

G. Industrial.

1. Manufacturing, fabricating, assembling, processing, packing, or storage establishments, wholesale establishment, freight depot, one space per 3,000 square feet of area used.

H. Where electric vehicle charging stations are provided in parking lots or parking garages, accessible electric vehicle charging stations shall be provided as follows:

1. Accessible electric vehicle charging stations shall be provided in the ratios shown on the following table.

Number of EV Charging Stations	Minimum Accessible EV Charging Stations
1 – 50	1
51 – 100	2
101 – 150	3
151 – 200	4
201 – 250	5
251 – 300	6

2. Accessible electric vehicle charging stations should be located in close proximity to the building or facility entrance and shall be connected to a barrier-free accessible route of travel. It is not necessary to designate the accessible electric vehicle charging station exclusively for the use of disabled persons. Below are two options for providing for accessible electric vehicle charging stations.

3. Designated Accessible Space. A WAC 51-50-005 required accessible parking space designated for the exclusive use of parking vehicles with a State Disabled Parking Permit.

4. Accessible Electric Vehicle Charging Station. An electric vehicle charging station where the battery charging station equipment is located within accessible reach of a barrier-free access aisle (minimum 44-inch width) and the electric vehicle. [Ord. 1398 § 1 (Exh. A), 2011; Ord. 1373 § 1 (Exh. A), 2010; Ord. 1146 (Exh. A), 2000.]

14.12.160 Location requirements.

A. Off-street parking spaces for single- and two-family dwellings shall be located on the same lot with the dwelling.

B. Off-street parking spaces for multifamily dwellings, and roominghouses, lodginghouses or boardinghouses, shall be located not farther than 200 feet from the dwelling, measured in a straight line from the dwelling.

C. Off-street parking spaces for all uses and buildings except as otherwise provided in this chapter shall be located not farther than 500 feet from the building or use they are required to serve, measured in a straight line from the building or use. Off-street parking required for uses in the central commercial district may be located not farther than 900 feet from the building or use it is intended to serve. Parking for city-owned and/or managed projects where employees will not be working on site on a daily basis may be located anywhere within the commercial zone districts of the city. If employees work on site, parking for the employees and visitors shall be provided in accordance with the provisions of this chapter.

D. In a residential district, the required off-street parking or loading area shall not be located within the first 10 feet of the required front yard setback area, adjacent to the public right-of-way. Any paved area that is within the front yard setback area shall be wide enough to serve the garage or a maximum of 25 feet in width. On 30-foot-wide lots, the paved area shall be a maximum of 10 feet in width and parking shall be at right angles to the street.

1. In the single-family residential zone districts, off-street parking located to the rear of the property off of an unpaved city alley is not required to be connected with an impervious surfaced driveway, but is required to gravel the required driveway and approved parking space. If there is a through driveway connecting to both a public street and unpaved alley, the driveway and associated parking shall be surfaced.

E. On-site parking in the central commercial district shall be to the rear of the building when alley access is available. [Ord. 1398 § 1 (Exh. A), 2011; Ord. 1373 § 1 (Exh. A), 2010; Ord. 1268 (Exh. D), 2005; Ord. 1146 (Exh. A), 2000.]

14.12.165 Electric vehicle charging station spaces.

A. Purpose. For all parking lots or garages, except those that include restricted electric vehicle charging stations.

B. Number. No minimum number of charging station spaces is required.

C. Minimum Parking Requirements. An electric vehicle charging station space may be included in the calculation for minimum required parking spaces that are required pursuant to other provisions of this code.

D. Location and Design Criteria. The following required and additional design criteria are provided in recognition of the various parking lot layout options:

1. Where provided, parking for electric vehicle charging purposes is required to include the following:

a. Signage. Each charging station space shall be posted with signage indicating the space is only for electric vehicle charging purposes.

b. Maintenance. Charging station equipment shall be maintained in all respects, including the functioning of the charging equipment. A phone number or other contact information shall be provided on the charging station equipment for reporting when the equipment is not functioning or other problems are encountered.

c. Accessibility. Where charging station equipment is provided within an adjacent pedestrian circulation area, such as a sidewalk or accessible route to the building entrance, the charging equipment shall be located so as not to interfere with accessibility requirements of WAC 51-50-005.

d. Lighting. Where charging station equipment is installed, adequate site lighting shall exist, unless charging is for daytime purposes only.

2. Parking for electric vehicles should also consider the following:

a. Notification. Information on the charging station, identifying voltage and amperage levels and any time of use, fees, or safety information.

b. Signage. Installation of directional signs at the parking lot entrance and at appropriate decision points to effectively guide motorists to the charging station space(s).

E. Data Collection. To allow for maintenance and notification, the city will require the owners of any private new electric vehicle infrastructure station that will be publicly available (see definition “electric vehicle charging station – public,” LMC 18.08.156) to provide information on the station’s geographic location, date of installation, equipment type and model, and owner contact information. [Ord. 1398 § 1 (Exh. A), 2011.]

14.12.170 Lot – Design requirements.

A. “Off-street parking space” means an off-street enclosed or unenclosed surfaced area permanently reserved for the temporary storage of one automobile and connected with a street by a surfaced driveway which affords ingress and egress for automobiles.

B. Areas used for parking lots shall be durable and dustless surfaces maintained adequately for all weather use. The surface must be of an impermeable material capable of accommodating the striping for parking stall identification.

C. Parking areas for other than single-family or two-family dwellings shall be designed so that no backing movements or other maneuvering within a street, other than an alley, shall be allowed. No parking stall shall be allowed within 20 feet of an ingress point of a parking lot so as not to back up traffic on a public street while a vehicle is backing out of a parking stall.

D. Snow storage areas shall not cover catch basins nor eliminate any required parking stalls. If snow storage is not on site, a suitable agreement for off-site snow storage must be approved by the community development director in consultation with the public works director.

E. Service drives (including fast food drive-through and pass-through lanes) to off-street parking areas shall be designed and constructed to facilitate the flow of traffic, provide maximum safety of traffic access and egress, and maximum safety of pedestrian and vehicular traffic on the site. The number of service drives shall be limited to the minimum that will allow the property to accommodate and service the traffic to be anticipated. Service drives shall be clearly and permanently marked and defined to avoid backing movements and other maneuvering within a street, other than an alley.

F. The following table shall be the required parking dimensional requirements:

Angle (in degrees)	Stall Width Long Term[a, 1]	Stall Width Short Term[a, 2]	Stall Depth[b]	One-Way Aisle Width[c, 5]	Parking Module Width[d]	Vehicle Overhang[e, 4]
0[3]	8 ft. 0 in.	8 ft. 6 in.	17 ft. 6 in.	10 ft. 0 in.	27 ft. 6 in.	2 ft. 6 in.
45	8 ft. 0 in.	8 ft. 6 in.	17 ft. 6 in.	12 ft. 6 in.	47 ft. 6 in.	2 ft. 0 in.
50	8 ft. 0 in.	8 ft. 6 in.	18 ft. 0 in.	13 ft. 0 in.	49 ft. 0 in.	2 ft. 1 in.
55	8 ft. 0 in.	8 ft. 6 in.	18 ft. 6 in.	13 ft. 6 in.	50 ft. 6 in.	2 ft. 2 in.
60	8 ft. 0 in.	8 ft. 6 in.	19 ft. 0 in.	14 ft. 6 in.	52 ft. 6 in.	2 ft. 3 in.

65	8 ft. 0 in.	8 ft. 6 in.	19 ft. 0 in.	15 ft. 0 in.	53 ft. 0 in.	2 ft. 4 in.
70	8 ft. 0 in.	8 ft. 6 in.	19 ft. 0 in.	16 ft. 0 in.	54 ft. 0 in.	2 ft. 5 in.
75	8 ft. 0 in.	8 ft. 6 in.	19 ft. 0 in.	17 ft. 6 in.	55 ft. 6 in.	2 ft. 6 in.
90	8 ft. 0 in.	8 ft. 6 in.	18 ft. 0 in.	20 ft. 0 in.	59 ft. 0 in.	2 ft. 7 in.

1. Long-term parking means parking turnover of no more than four vehicles per parking space per 12-hour period.
2. Short-term parking means parking turnover of more than four vehicles per parking space per 12-hour period.
3. Parallel parking.
4. If the parking stall has a curb stop, the vehicle overhang dimension that corresponds to the parking angle shall count towards the parking stall depth dimension.
5. If the parking aisle also serves as a fire lane, the minimum unobstructed width shall be 20 feet.

a. Stall width.
b. Stall depth.
c. Aisle width.
d. Parking module width.

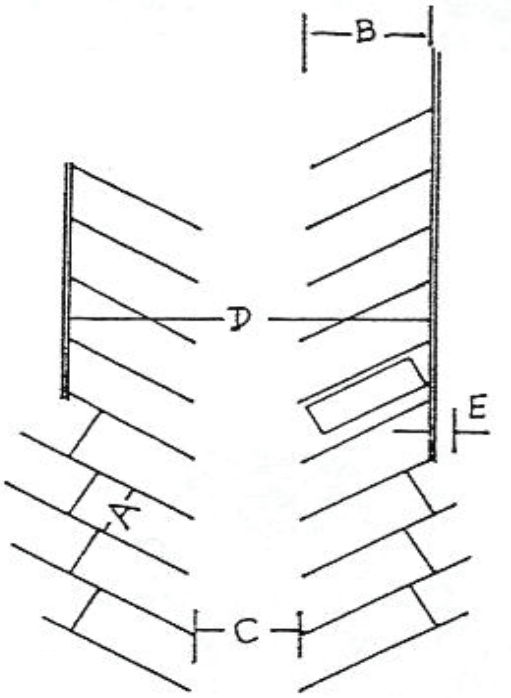

e. Vehicle overhang.

G. The minimum aisle width for two-way traffic is 23 feet zero inches for all parking angles.

H. Barrier-Free Parking. Parking spaces shall meet the standards set forth in Chapter 51-40 WAC as it now reads or is hereafter amended.

I. Curb cuts to all off-street parking facilities shall be a minimum of 33 feet and a maximum of 40 feet in width for two-way traffic. Curb cut width shall be measured from the top of the curb slope.

J. Curb cuts to all off-street parking facilities for one-way traffic shall be a minimum of 10 feet wider than the access aisle serving the off-street parking facility. The additional

10 feet in width shall be divided so as to ensure the access aisle lane is centered between the curb cuts.

K. A stormwater drainage plan, including a maintenance plan, utilizing best management practices, shall be submitted for approval by the city public works director. Stormwater drainage systems shall be maintained by the property owner.

L. All parking facilities shall be permanently maintained in such a way that dust is not emitted from the parking lot, and shall be free of weeds, litter, debris and graffiti. Parking lots shall be striped biannually.

M. Lighting shall be in conformance with Chapter 14.28 LMC, Lighting Standards. [Ord. 1373 § 1 (Exh. A), 2010; Ord. 1268 (Exh. C), 2005; Ord. 1146 (Exh. A), 2000.]

14.12.180 Underground parking – Design requirements.

A. The following requirements shall be in addition to LMC 14.12.170 requirements:

1. Underground parking shall be allowed in all commercial zones and the residential multifamily zone.

2. Columns and other structural elements may encroach into the parking space a maximum of six inches on a side, except in the area of the car door openings, five feet from the longitudinal centerline or four feet from the transverse centerline of the parking space. No wall, guardrail or other obstruction shall be permitted within the area for car door openings.

3. The minimum vehicle height clearance shall be seven feet. [Ord. 1373 § 1 (Exh. A), 2010; Ord. 1146 (Exh. A), 2000.]

14.12.185 Underground parking facility in the multifamily zone district to provide parking for a commercial zone district.

Underground parking facilities may be created on a property or properties located in the multifamily zone district to provide parking for use of a property or properties located on an adjacent land parcel (contiguous to or separated only by an alley) in the central commercial, tourist commercial, and/or general commercial zone districts. This is to allow for additional parking to be created which augments the supply of necessary or supplemental parking for the proposed project in a commercial zone district without reducing or eliminating land which is available and zoned for multifamily residential development, redevelopment and/or use. The following shall be in addition to the regulations set forth within LMC 14.12.170 and 14.12.180 and Chapter 18.22 LMC:

A. An underground parking facility in the multifamily zone district to provide parking for a commercial zone district shall be required to obtain approval through the conditional use permit process as outlined in Chapter 18.52 LMC. [Ord. 1373 § 1 (Exh. A), 2010.]

14.12.190 Landscaping requirements.

The following provisions shall be applicable to all parking facilities required by this chapter for all uses except single-family, duplex, or multifamily dwellings, which are regulated by the site plan approval standards in Chapter 18.22 LMC. Landscaping requirements for an underground parking facility in the multifamily zone district to provide parking for a commercial zone district shall be regulated through the conditional use permit process in Chapter 18.52 LMC.

A. Compliance with the provisions contained in this section shall be demonstrated during the permit review process by submittal of a scaled landscape plan prepared by the applicant. The plan shall include a legend showing botanical and common names, mature plant sizes according to the species and the variety and/or cultivar selected (armor and fruit-litter-free where possible), quantities, locations, dimensions of planted area and percentage of parking lot landscaping. Additionally, the applicant shall submit a separate irrigation plan showing the required permanent, automatic irrigation system. Both plans shall be reviewed and approved by the community development director prior to any permit approvals.

B. It is the responsibility of the property owner to ensure all landscaped areas shall be continuously maintained in a healthy growing condition, which shall be a pest-free condition (free of harmful insects, diseases, and weed infestations). If living tree, shrub and/or other plant materials are damaged or destroyed by any means, they shall be replaced with suitable materials in suitable quantities. An alternative replacement plan that maintains the continuity of the overall landscape program may be reviewed and approved by the community development director at the property owner's request.

C. If existing, well-established trees that have a trunk diameter of six inches or greater, as measured four feet above ground level, and/or vegetation (excluding noxious weeds and grasses) can realistically be utilized, they shall be preserved and incorporated into the overall landscape program.

D. A combination and variety of trees and/or shrubs, as well as living ground cover (can be in conjunction with natural ornamental landscaping materials such as bark) shall be provided in each landscaped area. The plant materials that are chosen shall be those best suited to the climate within the Leavenworth area, and shall be capable of providing shade to the parking facility within 15 years of planting.

E. A permanent and automatic irrigation system shall be installed and permanently maintained in all landscaped areas. Installation of the landscaping shall include preventative measures intended to reduce the necessary maintenance activities, particularly the incidence of weed growth.

F. The following minimum provisions shall be required for all parking facilities:

1. A minimum of 15 percent of the net asphalt area of all surface parking lots shall be landscaped. Projects with 3,000 square feet or less of gross area (prelandscaping) may qualify for a reduction down to 10 percent required landscaping if designed with the assistance of a city-approved licensed landscape architect or designer. The community development director shall have the authority to approve, approve with conditions, or disapprove of the design and has the discretion to determine the required percentage anywhere between 10 and 15 percent. There are no administrative appeals to the decision of the community development director; however, the applicant may reapply with a revised or new proposal.

2. Where parking facilities adjoin a public right-of-way, a landscaped planting strip at least six feet wide shall be established and continuously maintained between the public right-of-way, beginning at the back side of the public sidewalk, and the parking lot. Where the distance between the back side of the public sidewalk and the property line exceeds six feet, the entire distance between the sidewalk and the property line shall be landscaped. Any planting within 15 feet of a driveway shall not exceed 30 inches in height above street grade.

3. Where parking lots adjoin a residential or recreational zoning district, a landscaped planting strip at least 15 feet wide shall be established and continuously maintained between the parking lot and adjacent properties. This planting strip shall incorporate berming, fencing and/or ornamental screen walls to further separate the parking lot from the adjacent properties. If either a fence or wall is incorporated into this landscaping strip, the width may be reduced by 50 percent; provided, that any fencing shall be constructed of wood and be sight-obscuring; and any walls shall be constructed with masonry, blocks or textured concrete, with climbing plants and vines used to add texture and soften the appearance of both sides of the wall.

4. Provisions shall be made to ensure that adequate pedestrian paths connecting the parking lot with the public right-of-way are provided throughout the landscaped areas.

5. At least one tree for every six parking spaces shall be included in the development of the overall landscape program. The first priority in meeting this provision is to preserve existing, well-established trees that do not interfere with the safety, operation and functioning of the parking lot. As much as possible, trees shall be dispersed throughout the parking lot, particularly adjacent to public rights-of-way; however, appropriate clustering of trees may be permitted, as approved by the community development director, particularly when existing trees are preserved within the parking lot.

6. All areas in a parking facility not used for driveways, maneuvering areas, parking spaces or walks shall be permanently landscaped with suitable materials and shall be permanently maintained, pursuant to a maintenance program submitted by the applicant and approved by the community development director.

7. All landscaped areas shall have a border, as approved by the community development director, such as landscape timbers or blocks, to retain the landscaping materials and also to protect them from intrusion by vehicles. Except within 15 feet of a driveway, landscaped areas may include berming, ornamental block walls and similar techniques that provide variations and/or modulations in elevation, texture and similar characteristics.

8. To increase the parking lot landscaped area, a maximum of two feet of the parking stall depth may be landscaped in lieu of asphalt while maintaining the required parking dimensions.

G. The following minimum provisions shall be required for all aboveground parking structures:

1. The parking structure shall have a continuous five-foot minimum perimeter landscaping strip except on the side property lines of interior lots where adjoining or common-wall construction is approved with an adjacent building. In addition to the applicable requirements of this section, the perimeter landscaping strip for a parking structure shall incorporate some vertical elements at least every 20 feet.

2. Landscaping materials shall be provided in planters and/or pots for five percent of the total surface deck areas. The planters and/or pots shall be distributed throughout the top deck areas and along the perimeter of intermediate decks. [Ord. 1373 § 1 (Exh. A), 2010; Ord. 1268 (Exh. D), 2005; Ord. 1146 (Exh. A), 2000.]

Chapter 14.14
STREET, SIDEWALK, WATER, WASTEWATER, STORMWATER AND MISCELLANEOUS UTILITY DEVELOPMENT STANDARDS

Sections:

14.14.010 Purpose.
14.14.020 Scope.
14.14.030 Conformance with other regulations.
14.14.040 Concurrency for public facilities and utilities.
14.14.050 Definitions.
14.14.060 Permits required.
14.14.070 Permit applications.
14.14.080 Approval process.
14.14.090 General road and utility standards.
14.14.100 Water supply standards.
14.14.110 Sewage disposal standards.
14.14.120 Storm drainage standards.
14.14.130 Fire protection standards.
14.14.140 General utility standards.
14.14.150 Access standards.
14.14.160 Curb, gutter, and sidewalk standards.
14.14.170 Fees and performance or surety bonds.
14.14.175 Cost sharing.
14.14.180 Nonconformance.
14.14.190 Variances.
14.14.200 Appeals.
14.14.210 Administrative interpretations.
14.14.220 Compliance and enforcement.
14.14.230 Severability.

14.14.010 Purpose.

This chapter is adopted to regulate the development of land and to promote the public health, safety and general welfare in accordance with the standards established by the city of Leavenworth and the state of Washington to:

A. Prevent the overcrowding of land;

B. Lessen congestion on the streets and highways;

C. Provide adequate light and air;

D. Promote the proper arrangement of streets, lots, easements, pathways and other private or public ways;

E. Provide for adequate and convenient open spaces, utilities, recreation, and access for service and emergency vehicles;

F. Provide for adequate water, drainage, sewer and other public facilities;

G. Promote the coordination of development as land develops;

H. Conserve natural beauty and other natural resources;

I. Maintain and perpetuate environmental quality;

J. Provide for expeditious review and approval of proposed developments which conform to zoning standards, the comprehensive plan, and other local plans and policies; and
K. Adequately provide for the housing and commercial needs of the citizens of Leavenworth. [Ord. 1355 § 1 (Att. A), 2010; Ord. 1268 (Exh. A), 2005.]

14.14.020 Scope.
This chapter shall apply to the subdivision, development, and redevelopment of land. Subdivision, development, and redevelopment shall hereafter be referred to as “project(s).” This chapter shall not apply to activities such as boundary line adjustments and other minor land use activities if roads and utilities infrastructure are not needed at the time of approval. [Ord. 1355 § 1 (Att. A), 2010; Ord. 1268 (Exh. A), 2005.]

14.14.030 Conformance with other regulations.
A. No project shall be approved unless found to be in conformance with all adopted and applicable city ordinances, plans and policies.
B. This chapter recognizes and incorporates the standards, provisions, and regulations contained in other parts of the Leavenworth Municipal Code, as it exists now or as it may hereafter be amended.
C. This chapter recognizes and incorporates the standard details for construction of public improvements, as it exists now or as it may hereafter be amended. The city council has established by resolution the standard details for construction of public improvements, and other matters pertaining to this title. The standard details for construction of public improvements shall be kept by the city engineer or the city clerk-treasurer and may be altered or amended by resolution of the city council. Where conflicts or inconsistencies arise between the standard details for construction as approved by resolution of the city council and those in other titles, the standard details for construction as approved by resolution of the city council supersede those in other titles.
D. Approvals granted pursuant to this title shall only occur in compliance with these other regulatory provisions, as well as with the comprehensive plan and any other applicable laws and regulations.
E. Where provisions of other official controls and regulations overlap or conflict with the provisions of this title, the more restrictive provisions shall govern.
F. LMC Title 17 contains development standards for roads and utilities pursuant to the subdivision process. This chapter is intended to replace the regulations contained therein for all subdivision activity. If LMC Title 17 prescribes a regulation which is not delineated here in this chapter, the regulations of LMC Title 17 shall still apply. In all other cases, the regulations of this chapter shall apply.

14.14.040 Concurrency for public facilities and utilities.
Those public facilities and utilities required to be provided as a condition of approval shall be fully operational or bonded for concurrency with the use and occupancy of the development, except that concurrency for transportation facilities may be within six years of project approval at the discretion of the community development director working in consultation with the public works director. [Ord. 1355 § 1 (Att. A), 2010; Ord. 1268 (Exh. A), 2005.]

14.14.050 Definitions.
For the purposes of administering this title, definitions of terms used in this title are found primarily in Chapter 21.90 LMC, Common Definitions. [Ord. 1355 § 1 (Att. A), 2010; Ord. 1268 (Exh. A), 2005.]

14.14.060 Permits required.

A. Development standards shall be reviewed concurrently with the related application for a building permit, utility connection permit, land use permit, subdivision permit, and/or other associated type of activity and/or permit.

B. Inspections for compliance with this chapter are required. [Ord. 1355 § 1 (Att. A), 2010; Ord. 1268 (Exh. A), 2005.]

14.14.070 Permit applications.

Persons seeking permits or approval under this chapter shall:

A. Complete and submit an application for a building permit, utility connection permit, land use permit, subdivision permit, or other associated type of activity and/or permit.

B. Pay all required permit fees. [Ord. 1355 § 1 (Att. A), 2010; Ord. 1268 (Exh. A), 2005.]

14.14.080 Approval process.

Persons seeking permits or approval under this chapter shall be subject to the level of review required for the associated permit pursuant to LMC Title 21. [Ord. 1355 § 1 (Att. A), 2010; Ord. 1268 (Exh. A), 2005.]

14.14.090 General road and utility standards.

A. All projects shall comply with the following:

1. Streets, sidewalks, water, wastewater, stormwater and miscellaneous utility infrastructure shall be laid out in a manner which allows for accessibility, further development of all parcels within the region, and well-designed networks and circulation.

2. The developer shall be required to improve the full portion of the streets, sidewalks, water, wastewater, stormwater and miscellaneous utility infrastructure necessary to serve the development.

3. The developer shall be required to design easements and dedications in a manner which facilitates the future development of the region as determined by the community development director. This shall be accomplished by establishing easements and dedications to the furthest lot line, as well as other similar methods.

4. All easements and dedications shall be designed in a manner which provides the necessary dimensional specifications required for future development.

5. Design detail, workmanship, and materials for utilities and public works improvements shall be in accordance with the current editions of:

a. “Standard Specifications for Road, Bridge, and Municipal Construction,” as amended;

b. “APWA Amendments to Division One,” as amended; and

c. “Standard Plans for Road, Bridge, and Municipal Construction,” as amended.

i. Those manuals specified in subsections (A)(5)(a), (b), and (c) of this section are written and promulgated by the Washington State Chapter of the American Public Works Association and the Washington State Department of Transportation;

ii. The standard provided therein shall apply except where standards contained in this title or elsewhere in the Leavenworth Municipal Code provide otherwise.

6. All applicable rules of Washington State shall be adhered to with respect to safety, construction methods, and other state requirements. These include, but are not limited to:
   a. The Revised Code of Washington (RCW); and
   b. The Washington Administrative Code (WAC).
7. Conditions, standards, design, layout, and regulations contained in the following documents shall be applicable when pertinent, when specifically cited in the documents, or as required by a permitting authority/agency, and/or the city:
   a. City of Leavenworth Water Distribution System and Sewer Collection System Master Plan, dated June 10, 2008, as amended;
   b. City of Leavenworth Comprehensive Water System Plan (CLCWSP), November 2002, as amended;
   c. City of Leavenworth Wastewater Facilities Plan (CLWFP), April 1996, as amended;
   d. City of Leavenworth Comprehensive Plan (CLCP), August 2003, as amended;
   e. Leavenworth Municipal Code (LMC) as of April 13, 2004, as amended;
   f. Local Agency Guidelines (LAG), as approved by the Washington State Department of Transportation, as amended;
   g. Washington State Department of Transportation Design Manual as adopted by the Washington State Department of Transportation, as amended;
   h. U.S. Department of Transportation Manual on Uniform Traffic Control Devices (MUTCD), as adopted by the Washington State Department of Transportation, as amended;
   i. Criteria for Sewage Works Design, Washington State Department of Ecology Publication No. 98-37 WQ, December 1998, as amended;
   j. Chapter 246-290 WAC for Group A public water systems, as amended; and
   k. Eastern Washington Stormwater Management Manual, as amended. International Fire Code, as amended.

B. The standards and requirements established or referenced by this title are minimum requirements. These standards may be increased and additional requirements may be imposed for the purpose of mitigating identified probable significant adverse environmental impacts pursuant to the State Environmental Policy Act, Chapter 43.21C RCW, as now established or hereafter amended. Such additional requirements may include, but shall not be limited to, off-site improvements to any public facility, the dedication and/or improvement of parks and open spaces, and monetary contributions to any city fund established to finance the provision of public services. [Ord. 1355 § 1 (Att. A), 2010; Ord. 1268 (Exh. A), 2005.]

14.14.100 Water supply standards.

A. All projects shall be served by the water system of the city of Leavenworth as approved by the city engineer working in consultation with the development services manager.

B. It is compulsory for every new building(s) or existing building(s) meeting the criteria below within the UGA to hook up to the city water system, if said buildings are located within 200 feet of existing water mains. The existing domestic water source (well) shall be abandoned in conformance with local and state regulations with any rights associated with the well transferred to the City at the option of the City. Pursuant to LMC 13.04.040, all individuals, firms or organizations located within city limits requiring domestic water service shall be required to be connected to the city's water system. Private domestic wells are not permitted. Any existing private domestic well shall be abandoned in conformance with local and state regulations with any rights associated with the well transferred to the City at the option of the City. Private irrigation wells will be permitted within the city limits on parcels two acres or larger; provided, that the city reserves the right to deny approval of wells which may threaten the city's present or future domestic supplies or water rights. A permit signed by the city administrator must be obtained for such systems. Appropriate backflow prevention devices are required and inspection of the installation by the city is required for such systems.

    1. For existing buildings, as described above, which become located within the 200 feet as a result of improvements to the city water system, connection to those improvements shall be made when one of the following occurs:

        a. Remodeling or expansion of the existing building which exceeds 50 percent of the value of the building/structure.

        b. Remodeling or expansion of the existing building occurs which would require an upgrade of an existing on-site water system, as determined by the Chelan-Douglas health district; or

        c. The existing water system is failing, as determined by the Chelan-Douglas health district.

C. All water supply systems shall be designed and constructed according to all applicable provisions of this chapter and specifications on file in the office of the city engineer unless otherwise provided for in the Leavenworth Municipal Code.

D. When water rights are appurtenant to the land, the property owner shall covenant to transfer water rights to the city in a quantity which is equal to the quantity to be utilized by the development and the covenant shall run with the land into perpetuity. The transfer may occur at the time of development or at a future point in time, as decided by the city. Property owner shall cooperate with the transfer.

E. Whenever possible, if either a public or private irrigation source is available and is currently being utilized for the applicable property, the property owner shall continue to utilize this source for all outside irrigation. The feasibility of this shall be evaluated and a determination of applicability made by the city as part of the application process. The property owner shall provide such information the city determines necessary to make this decision.

F. Public Works Director Approval - For properties located inside of the city's UGA and its City Limits, the City Public Works Director shall approve water connection subject to requirements for connection as found within the Leavenworth Municipal Code.

G. City Administrator Approval - For properties located outside of the city's UGA and need is demonstrated, the City Administrator may grant connection to the city water system subject to the following:

1. Providing documentation that at least one attempt to drill a well down to bedrock yielded insufficient quantities of potable water necessary to serve one single family resident as determined by the City; and prior to connection, the requestor transfers the water right to the City of Leavenworth.
2. Providing documentation that an existing well to bedrock yields insufficient quantities of potable water necessary to serve one single family resident as determined by the City; and prior to connection, the requestor transfers the water right to the City of Leavenworth.
3. Providing documentation that an existing well is to be abandoned in favor of connection to the City domestic water system; and prior to connection, the requestor transfers the water right to the City of Leavenworth.
4. A recorded subdivision in situations where the final plat was based on the city's prior commitment to provide water, and if the lot was legally created prior to March 12, 1996.
5. Transfer of water rights to the City shall follow the procedure found within RCW 90.44.105, or other applicable statute and as approved by the City for consolidating exempt well water rights into the City's water rights when adding customers to the City water system who were previously served by exempt well withdrawals.

H. Council Approval – In addition to the circumstances permitted in G, for properties located outside of the city's UGA and not falling within G, the City Council may grant (at the Council's sole discretion) an exception to allow an extension and/or connection to the city water system subject to the following:

1. Consideration for the protection of water use for properties within the City as a priority and paramount prior to granting water outside of the City. Granting water connections outside of the City UGA is a not a right, and the intent is to ensure water is available to the citizens of Leavenworth.
2. After purchase of property, a plight of the applicant is due to unique and unexpected circumstances over which the property owner has no control; and
3. The authorization of the exception shall not be materially detrimental to the purposes of this title, be injurious to property in the same district or neighborhood

in which the property is located, or be otherwise detrimental to the objectives of any comprehensive plan; and

4. Water extension and/or connection for the creation of a lot shall be a one-time waiver, shall not be allowed to serve more than one lot, shall not be transferable, and the properties created shall not be allowed future/additional water extension and/or connection for a period of no less than 10 years. Such moratorium shall include a notice to title recorded with the Chelan County auditor's office which shall be recorded at the expense of the property owner.

I. Regardless of approval process, G or H, and for all properties located outside of the city's UGA, all of the following standards shall be met:

1. Not more than a total of three equivalent residential units (ERU) per calendar year shall be granted for connections outside of the UGA under G or H together, beginning the first of January of each year, and allowance will be issued as vested by application; and
2. Prior to connection, the property owner shall transfer to the city of Leavenworth their present domestic water rights and cooperate in any process to transfer those rights to the City, unless otherwise specifically waived by the city council; and
3. The applicant shall install a new water main to the property within right-of-way or public utility easement. The line size shall be determined by the city engineer; and
4. The applicant shall be responsible to install necessary appurtenances for the water line extension, such may include but are not limited to fire hydrant(s). At no time may an extension of water line, for the purposes of this provision, be extended beyond that of the original approval; and
5. Construction and installation shall adhere to the adopted Standard Details and/or applicable LMC standards and specifications; and
6. A water connection shall not be allowed to split into two or more. The lateral line (connection) shall serve a single structure; and
7. The property owner, their successors, heirs, and assigns shall record with the Chelan County auditor's office a notice to title, as approved by the city of Leavenworth, which provides notice of and binds all future property owners to the following waivers of protest and other requirements. It shall also be the obligation of the property owner, their successors, heirs, and assigns to inform potential buyers of these items:

    a. Property owners, their successors, heirs, and assigns shall not protest annexation. Provided further, nothing in approval of extension of city water shall bind the city to annex said property nor obligate the city to approve future subdivision and development of the property, nor impose or not impose any particular conditions or requirements for said development and land use actions, nor implement improvements to its utilities and/or roads that may be required to serve the development. If the city agrees to annex this property, the city does not warrant that existing facilities are adequate to serve this development.

b. Property owners, their successors, heirs, and assigns agree to participate in future local improvement districts (LID) and/or other similar financing mechanisms for the redevelopment of streets, sidewalks, utilities and related infrastructure in the area. This participation shall be in accordance with reasonable methods established by Washington State law and/or by local law, and shall be for a pro-rata share of improvements in the geographic area as established by a benefits assessment or other similar mechanism.

8. No extension or connection for water service may be allowed if such connection or extension outside the City's UGA would violate the Growth Management Act of the State of Washington.

14.14.110 Sewage disposal standards.
A. All projects shall be served by the sanitary sewer system of the city of Leavenworth as approved by the community development director working in consultation with the director of public works.
B. All sanitary sewers shall be designed and constructed according to all applicable provisions of this chapter and specifications on file in the office of the director of public works unless otherwise provided for in the Leavenworth Municipal Code. [Ord. 1355 § 1 (Att. A), 2010; Ord. 1268 (Exh. A), 2005.]

14.14.120 Storm drainage standards.
A. All projects shall be provided with adequate provisions for storm drainage that is connected to the storm drainage system of the city or other on-site system, as approved

by the community development director working in consultation with the director of public works.

B. All storm drainage systems shall be designed and constructed according to all applicable provisions of this chapter, the Eastern Washington Stormwater Management Manual, as amended, and specifications on file in the office of the director of public works unless otherwise provided for in the Leavenworth Municipal Code. [Ord. 1355 § 1 (Att. A), 2010; Ord. 1268 (Exh. A), 2005.]

14.14.130 Fire protection standards

14.14.130 Fire protection standards.

A. All projects shall be provided with adequate provisions for fire protection as approved by the community development director working in consultation with the fire marshal.

B. All systems shall be designed and constructed according to all applicable provisions of this chapter and the International Fire Code, unless otherwise provided for in the Leavenworth Municipal Code. [Ord. 1355 § 1 (Att. A), 2010; Ord. 1268 (Exh. A), 2005.]

14.14.140 General utility standards.

A. All utilities shall be in conformance with the provisions contained in this chapter and shall be placed underground unless topographic constraints otherwise prohibit their placement underground.

B. Easements may be required along the lot lines or through blocks where necessary for the extension of existing or planned utilities.

C. Such easements shall have written approval from the utility purveyor prior to acceptance of the final plat. [Ord. 1355 § 1 (Att. A), 2010; Ord. 1268 (Exh. A), 2005.]

14.14.150 Access standards.

A. General Standards. All projects shall be provided with access via an improved road meeting the specifications contained in this chapter, and as designated in the city of Leavenworth comprehensive plan unless otherwise provided for in the Leavenworth Municipal Code.

B. Design Standards. The following table delineates the applicable road types and road designs which shall be required for all projects:

Type	ROW Width	Purpose

Type	ROW Width	Purpose
Urban collector	60 ft. **(See adopted Standard Details)**	Collects traffic from a region and/or the primary road to which local access roads from neighborhoods/commercial/industrial areas connect
Urban local access	50 ft. **(See adopted Standard Details)**	Provides access and circulation within commercial areas and single/multifamily neighborhoods
Industrial local access	44 ft. **(See adopted Standard Details)**	Provides access and circulation within industrial areas
Driveway (private)	20 ft./10 ft. **(See adopted Standard Details)**	Serves one single-family residential lot or the equivalent ADT producer for other land uses

Dead-end roads may be required to provide a turnaround.

Flag lots which serve as access roads shall be regulated in the same manner as the roads to which they compare.

C. Fire apparatus roads and private driveways shall meet the following standards:

1. Fire apparatus roads shall serve no more than a total of three single-family residential lots and are intended to provide access to existing developed areas for infill development purposes.

2. Private driveways shall serve no more than a total of one lot, are intended to provide access to one single-family residential lot, and are intended to provide access to existing developed areas for infill development purposes.

3. Fire apparatus roads and private driveways shall require recording of a road maintenance and upgrading agreement. If subdivision is involved, a note shall be recorded on the plat regarding the agreement.

4. Fire apparatus roads and private driveways shall not be used for access where access to more remote properties would be inhibited or where the development standards for public streets outlined in this chapter could be accommodated, or for properties that can be further subdivided, unless topography, wetlands, or other natural features necessitate this type of access.

5. Multiple fire apparatus roads/private driveways shall not be allowed in place of a city street adequate to serve the area or development built to the standards outlined in this title.

6. Access via a fire apparatus road/private driveway shall be limited to one such access on the parent parcel existing at the time of adoption of this code on April 13, 2004. [Ord. 1355 § 1 (Att. A), 2010; Ord. 1268 (Exh. A), 2005.]

14.14.160 Curb, gutter, and sidewalk standards.

A. All projects shall provide permanent concrete or paver curbs, gutters, and sidewalks in conformance with the standards contained in this chapter.

B. In cases of limited infill development, the standard can be waived by the community development director working in consultation with the public works director. [Ord. 1355 § 1 (Att. A), 2010; Ord. 1268 (Exh. A), 2005.]

14.14.170 Fees and performance or surety bonds.

A. Fees, Rates, and Charges.

1. The city council has established by resolution a rate and fee schedule for community development rates, fees, and charges for permits, applications, and other matters pertaining to this title.

2. The rate and fee schedule resolution, as amended, is hereby adopted.

3. Until all applicable fees, charges, and expenses have been paid as required in the fee schedule, no action shall be taken by the city on any application, appeal or request.

B. Performance or Surety Bond. As a condition of approval for the issuance of any development permit or any permit issued under this title or other associated titles contained in the Leavenworth Municipal Code, a performance or surety bond may be required.

C. Bond Criteria.

1. The city attorney shall approve all performance and surety bonds as to form and securities.

2. The director(s) of the affected department(s) shall approve all performance and surety bonds as to amount and adequacy.

3. The value of the bond shall be equal to at least 150 percent of the estimated cost of the improvement(s) to be performed for improvements completed within a one-year time frame or 200 percent for improvements completed within a two-year time frame, or to be utilized by the city to perform any necessary work, or to reimburse the city for performing any necessary work and documented administrative costs associated with action on the bond. To determine this value, the applicant must submit up to two bids for the improvements to be performed. If costs incurred by the city exceed the amount provided by the assurance device, the property owner shall reimburse the city in full, or the city may file a lien against the subject property for the amount of any deficit. Please see LMC 17.02.070 for exceptions to this time frame on bonding.

4. Upon completion of the required work by the property owner and approval by the city at or prior to the completion date identified in the assurance device, the city shall release the device.

5. If the performance bond or surety is required, the property owner shall provide the city with an irrevocable notarized agreement granting the city and its agents the right to enter the property and perform any required work remaining uncompleted at the expiration of the completion date identified in the assurance device. [Ord. 1355 § 1 (Att. A), 2010; Ord. 1268 (Exh. A), 2005.]

14.14.175 Cost sharing.

The city may choose to engage in a cost sharing agreement for utility improvement(s) at its discretion and to the amount and/or method it chooses and may use the following criteria as a guide when considering an agreement:

A. The project is identified in the city's capital improvement plan;

B. There is a system-wide benefit which would be derived by the improvement(s); and/or

C. The improvement(s) does not exceed the annual budgeted amount established by the city council for cost sharing. [Ord. 1355 § 1 (Att. A), 2010.]

14.14.180 Nonconformance.

Nonconforming projects under the standards of this chapter shall be subject to the requirements of the Leavenworth Municipal Code. [Ord. 1355 § 1 (Att. A), 2010; Ord. 1268 (Exh. A), 2005.]

14.14.190 Variances.

A. Variances from the standards of this chapter shall be pursuant to the processes within the Leavenworth Municipal Code.

B. The community development director working in consultation with other agencies and departments with expertise shall be given discretional authority to rule on the applicability of these standards, determine modifications necessary to fit development patterns, topography, and other constraints, and at his/her discretion to require formal application to the hearing examiner for variance of the standards. [Ord. 1355 § 1 (Att. A), 2010; Ord. 1268 (Exh. A), 2005.]

14.14.200 Appeals.

A. Appeals of the decisions made under this chapter shall be pursuant to the processes within the Leavenworth Municipal Code.

B. An applicant aggrieved by any part, requirement or process set forth in this chapter must exhaust all available administrative remedies before seeking recourse in the courts. [Ord. 1355 § 1 (Att. A), 2010; Ord. 1268 (Exh. A), 2005.]

14.14.210 Administrative interpretations.

Administrative interpretations of this chapter shall be made pursuant to the processes within the Leavenworth Municipal Code. [Ord. 1355 § 1 (Att. A), 2010; Ord. 1268 (Exh. A), 2005.]

14.14.220 Compliance and enforcement.

Compliance and enforcement of this chapter shall be conducted pursuant to the processes within the Leavenworth Municipal Code. [Ord. 1355 § 1 (Att. A), 2010; Ord. 1268 (Exh. A), 2005.]

14.14.230 Severability.

If any section, subsection, sentence, clause, or phrase of this title is, for any reason, held to be invalid or unconstitutional, such invalidity or unconstitutionality shall not affect the validity or constitutionality of the remaining portions of this title. [Ord. 1355 § 1 (Att. A), 2010; Ord. 1268 (Exh. A), 2005.]

ILLUSTRATION 1

(See adopted Standard Details)

PRIVATE DRIVEWAY

A private driveway serving a maximum of one residential lot or equivalent ADT producer. A private driveway shall be 20 feet wide up to a point which provides fire access within 150 feet of existing or proposed structures. The remaining private driveway shall be composed of six inches of crushed gravel and two inches of hot mix, double shot BST mix or concrete.

(See adopted Standard Details)

Turnarounds

Turnarounds shall only be accepted due to constraints of a water body, topography, and as determined by the City. The intent is to provide streets with connectivity and circulation. Dead-end roads that exceed 150 feet may be required to provide an emergency vehicle turnaround.

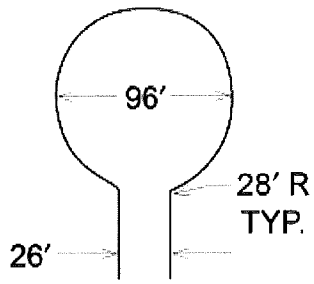

96-FOOT DIAMETER CUL-DE-SAC

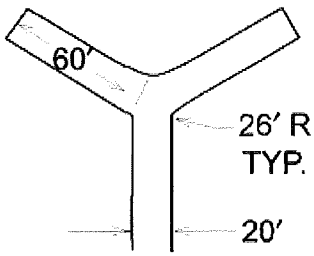

60-FOOT "Y"

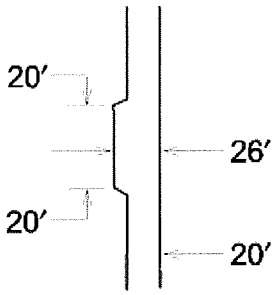

MINIMUM CLEARANCE AROUND A FIRE HYDRANT

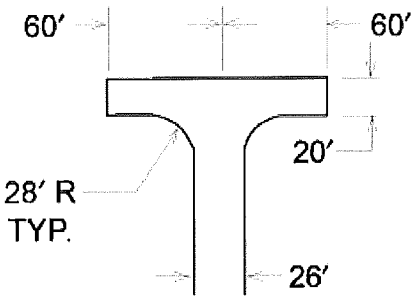

120-FOOT HAMMERHEAD

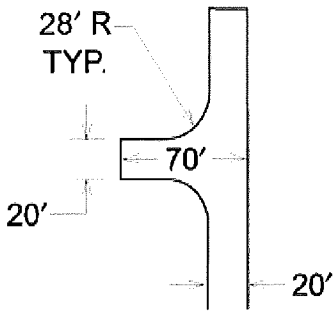

ACCEPTABLE ALTERNATIVE TO 120-FOOT HAMMERHEAD

TEMPORARY CUL-DE-SAC

A temporary cul-de-sac shall be provided when there is a foreseeable likelihood of extending the road to adjacent properties, or as part of a subdivision phasing plan. A bulb area lying outside of the road right-of-way shall be required as a temporary easement pending forward extension of the road. Surfacing, curb and gutter requirements shall be as required for typical roadway section for the road classification. Removal of the temporary cul-de-sac shall be the responsibility of the developer who extends the road.

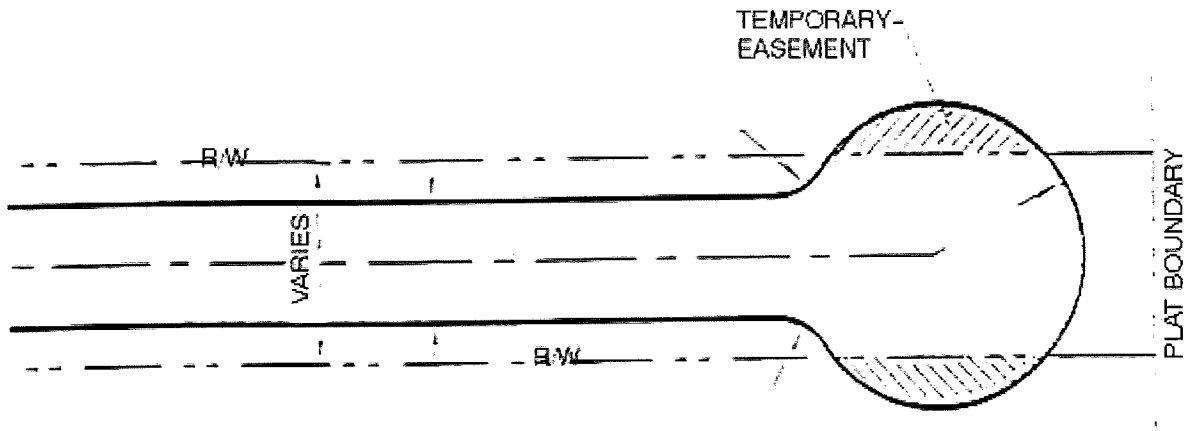

Chapter 14.16
RESIDENTIAL STRUCTURE DESIGN STANDARDS

Sections:

14.16.010 Purpose.
14.16.020 Scope.
14.16.030 Conformance with other regulations.
14.16.040 Definitions.
14.16.050 Permits required.
14.16.060 Permit applications.
14.16.070 Approval process.
14.16.080 Manufactured home standards.
14.16.090 Design standards – All types of construction.
14.16.100 Nonconformance.
14.16.110 Variances.
14.16.120 Administrative interpretations.
14.16.130 Appeals.
14.16.140 Compliance and enforcement.
14.16.150 Severability.

14.16.010 Purpose.

A. It is the purpose of this chapter to set forth the terms and conditions under which single-family homes may be sited and to ensure that manufactured homes as defined herein may be sited in any zone where single-family homes are permitted pursuant to the intent of Senate Bill 6593 of the 58th Legislature, passed in the 2004 Regular Session. Senate Bill 6593 was created to provide for consumer choice in housing and is a tool for provision of affordable housing. The city of Leavenworth has found that the natural scenic beauty and adopted “Old World Bavarian theme” form the basis for Leavenworth’s thriving tourist industry, upon which the city’s economic health heavily depends, and that structures complementing the aesthetics of existing neighborhoods form a key part of the overall visual attractiveness of the city, and thereby contribute both to the aesthetic and economic well-being of the city of Leavenworth. The city of Leavenworth further recognizes the importance of provision of affordable housing in a manner which is complementary to the neighborhood in which it will be located and in a manner which does not reduce surrounding property values. To ensure this, this chapter requires complementary design standards for all single-family homes and has specific limitations on the types of manufactured homes which can be installed. These regulations apply to all zones where single-family homes exist and in zones which permit the construction of single-family residences. If any of the locally developed design elements of this chapter are in conflict with the Old World Bavarian design theme code, the Old World Bavarian design theme code shall prevail if not in direct conflict with state law.

B. Without limiting the generality in the preceding subsection the city of Leavenworth expressly finds that the regulations set forth in this chapter further the following substantial interests of the city and its citizens:

1. Maintenance and improvement of the community’s appearance;
2. Elimination of visual clutter;

3. Ensuring and improving property safety;
4. Preserving property values;
5. Attracting sources of economic development. [Ord. 1268 (Exh. B), 2005.]

14.16.020 Scope.

A. The regulations in this chapter shall apply to all single-family homes whether manufactured, modular, site-built, or other related types of construction.

B. This chapter is not intended to apply to multifamily dwelling units unless they are stand alone units which emulate single-family construction. [Ord. 1268 (Exh. B), 2005.]

14.16.030 Conformance with other regulations.

A. No project shall be approved unless found to be in conformance with all adopted and applicable city ordinances, plans and policies.

B. This chapter recognizes and incorporates the standards, provisions, and regulations contained in other parts of the Leavenworth Municipal Code, as it exists now or as it may hereafter be amended.

C. Approvals granted pursuant to this title shall only occur in compliance with these other regulatory provisions, as well as with the comprehensive plan and any other applicable laws and regulations.

D. Where provisions of other official controls and regulations overlap or conflict with the provisions of this title, the more restrictive provisions shall govern. [Ord. 1268 (Exh. B), 2005.]

14.16.040 Definitions.

A. Mobile Home, Manufactured Home (Source RCW 46.04.302, Motor Vehicles). “Mobile home” or “manufactured home” means a structure, designed and constructed to be transportable in one or more sections, and which is built on a permanent chassis, and designed to be used as a dwelling with or without a permanent foundation when connected to the required utilities that include plumbing, heating, and electrical systems contained therein. The structure must comply with the National Mobile Home Construction and Safety Standards Act of 1974 as adopted by Chapter 43.22 RCW, State Government – Executive, Department of Labor and Industries, if applicable. Manufactured home does not include a modular home. A structure which met the definition of a “manufactured home” at the time of manufacture is still considered to meet this definition notwithstanding that it is no longer transportable.

B. Designated Manufactured Home (Source: RCW 35.63.160 and 1988 c 239 s 1, Planning Commissions). A “designated manufactured home” is a manufactured home constructed after June 15, 1976, in accordance with the state and federal requirements for manufactured homes, which:

1. Is comprised of at least two fully enclosed parallel sections each not less than 12 feet wide by 36 feet long;
2. Was originally constructed with and now has a composition or wood shake or shingle, coated metal or similar roof of nominal 3:12 pitch; and
3. Has exterior siding similar in appearance to siding materials commonly used on conventional site-built International Residential Code compliant single-family residences.

C. New Manufactured Home (Source: RCW 35.63.160 and 1988 c 239 s 1, Planning Commissions). A “new manufactured home” is any manufactured home required to be titled under RCW Title 46, Motor Vehicles, which has not been previously titled to a retail purchaser, and is not a “used mobile home” as defined in RCW 82.45.032 (2), Excise Tax on Real Estate Sales.

D. Used Mobile Home (Source: RCW 82.45.030(2), Excise Tax on Real Estate Sales). “Used mobile home” means a mobile home which has been previously sold at retail and has been subjected to tax under Chapter 82.08 RCW, Retail Sales Tax, or which has been previously used and has been subjected to tax under Chapter 82.12 RCW, Use Tax, and which has substantially lost its identity as a mobile unit at the time of sale by virtue of its being fixed in location upon land owned or leased by the owner of the mobile home and placed on a foundation (posts or blocks) with fixed pipe connections with sewer, water, and other utilities.

E. Other. To the extent not defined in this chapter, words used in this chapter will be defined according to the definitions used within LMC Titles 14 through 21. [Ord. 1268 (Exh. B), 2005.]

14.16.050 Permits required.

A. Design standards shall be reviewed concurrently with the related application for a building permit.

B. Inspections for compliance with this chapter are required. [Ord. 1268 (Exh. B), 2005.]

14.16.060 Permit applications.

Persons seeking permits or approval under this chapter shall:

A. Complete and submit an application for a building permit.

B. Complete and submit an application for a residential design review permit. [Ord. 1268 (Exh. B), 2005.]

14.16.070 Approval process.

Person seeking permits or approval under this chapter shall be subject to the level of review required for the associated building permit pursuant to LMC Title 21. [Ord. 1268 (Exh. B), 2005.]

14.16.080 Manufactured home standards.

Pursuant to Chapters 35.21, Cities and Towns, Miscellaneous Provisions, 35A.21, Optional Municipal Code, Provisions Affecting All Code Cities, and 36.01 RCW, Counties, General Provisions, the city of Leavenworth requires that:

A. All homes built to 42 USC Section 5401-5403 standards (as amended in 2000) shall be regulated for the purposes of siting under the zoning code in the same manner as site-built homes, factory built homes, or homes built to any other state construction or local design standard.

B. The manufactured home installed shall be a “new manufactured home” as defined in RCW 35.63.160 and 1988 c 239 s 1, Planning Commissions. Used mobile and manufactured homes are not allowed to be placed within the city limits.

C. The manufactured home shall be set upon a permanent foundation as specified by the manufacturer, and the space from the bottom of the home to the ground shall be

enclosed by concrete or a concrete product which shall be load bearing. The concrete product shall be approved by the community development director working in consultation with the code enforcement officer.

D. The manufactured home shall comply with all local design standards applicable to all other homes within the neighborhood in which the manufactured home is to be located.

E. The manufactured home shall be thermally equivalent to the state energy code.

F. The manufactured home shall meet all requirements for a “designated manufactured home” as defined in RCW 35.63.160 and 1988 c 239 s 1, Planning Commissions. [Ord. 1268 (Exh. B), 2005.]

14.16.090 Design standards – All types of construction.

The following standards shall apply to all single-family homes, modular homes, and manufactured homes, or other related types of construction.

A. If the main entry door of the dwelling does not face the street from which the front yard setback is derived, a minimum of 30 square feet of glazing shall be on the portion of the dwelling facing the street on which the front yard setback is located;

B. Entry porches/landing areas shall be constructed as an integral part of the dwelling architecture and of materials which complement the primary structure;

C. Attached/detached garages shall be constructed with siding materials which are the same, or similar to those of the primary structure;

D. Eave overhangs shall be a minimum of 12 inches except in cases where the specific architectural type (i.e., English Tudor) is complemented by a lesser eave overhang distance;

E. All dwellings shall be permanently connected to foundations, and must meet seismic, snow, and wind loading standards for the city of Leavenworth (SDC C);

F. All foundations shall meet International Residential Code standards for site-built homes;

G. Any support structure built to meet snow loading standards shall be designed to integrate with the building and shall not be a separate support structure, such as a portico;

H. On level grades, no more than 12 inches of foundation wall shall be exposed on the walls facing a street (an additional factor of plus 2 percent (above the 12-inch maximum) may be included for drainage); greater than 12 inches of foundation wall may be exposed in cases where the slope of the lot necessitates this;

I. All siding shall extend below the top of the foundation 1.5 to two inches. A bottom trim board does not qualify as siding and cannot be used to cover the top of the foundation;

J. All skirting materials shall resemble a typical residential foundation;

K. All wheels, tongues, and other transportation equipment shall be permanently removed;

L. All trim materials around windows, doors, corners, and other areas of the dwelling, shall be a material which complements the structure and which is not subject to deterioration; and

M. All additions and/or other architectural features shall be designed and permanently connected to the dwelling so as to be an integral part of the dwelling. [Ord. 1268 (Exh. B), 2005.]

14.16.100 Nonconformance.

A. Nonconforming structures under the standards of this chapter shall be subject to the requirements of the Leavenworth Municipal Code.

B. Single-family residences in existence at the time of initial adoption date of the ordinance codified in this chapter shall be exempt from compliance with these standards when remodeled, enlarged, expanded on and moved as delineated in LMC 18.68.040(A). However, if damage, demolition, or destruction occurs beyond the percentage allowed under nonconforming provisions in LMC 18.68.040(B)(1), the structure, when rebuilt, shall thereafter comply with this chapter. [Ord. 1268 (Exh. B), 2005.]

14.16.110 Variances.

A. Variances from the standards of this chapter shall be pursuant to the processes within the Leavenworth Municipal Code.

B. Pursuant to the intent of LMC 18.68.030, Nonconforming lots of record, variances to setbacks and lot coverage on nonconforming lots of record based on standard dimensions of manufactured homes shall not be allowed. [Ord. 1268 (Exh. B), 2005.]

14.16.120 Administrative interpretations.

Administrative interpretations of this chapter shall be made by the director of community development pursuant to the processes within LMC Title 21. [Ord. 1268 (Exh. B), 2005.]

14.16.130 Appeals.

A. Appeals of decisions made under this chapter shall be pursuant to the processes within LMC Title 21.

B. An applicant aggrieved by any part, requirement or process set forth in this chapter must exhaust all available administrative remedies before seeking recourse in the courts. [Ord. 1268 (Exh. B), 2005.]

14.16.140 Compliance and enforcement.

Compliance and enforcement of this chapter shall be conducted by the director of community development pursuant to the processes within LMC Title 21. [Ord. 1268 (Exh. B), 2005.]

14.16.150 Severability.

If any section, subsection, sentence, clause, or phrase of this chapter is, for any reason, held to be invalid or unconstitutional, such invalidity or unconstitutionality shall not affect the validity or constitutionality of the remaining portions of this chapter. [Ord. 1268 (Exh. B), 2005.]

Chapter 14.17
FLAGS, FLAGPOLES, TOWERS, AND TOWER STRUCTURES

Sections:

14.17.010 Purpose.
14.17.020 Definitions.
14.17.030 Scope.
14.17.040 Permits required.
14.17.050 Approval process.
14.17.060 Business signage/advertising.
14.17.070 Height.
14.17.080 Setbacks.
14.17.090 Size.
14.17.100 Number.
14.17.110 Manner of display.
14.17.120 Light display.
14.17.130 Nonconformance.
14.17.140 Variances.
14.17.150 Appeals.
14.17.160 Administrative interpretation.
14.17.170 Compliance and enforcement.
14.17.180 Severability.

14.17.010 Purpose.

The regulations set out in this chapter are for the construction and display of flags, flagpoles, towers and tower structures. The city has determined that clear rules and regulations are needed governing the permitting review, erection and construction of flags, flagpoles, towers, tower structures, and associated light displays to assure that such structures are built with a proper footing and foundation and that the appropriate safety concerns are addressed and observed. In addition, the city of Leavenworth has found that the natural scenic beauty and adopted Old World Bavarian-Alpine theme form the basis for Leavenworth's thriving tourist industry, upon which the city's economic health heavily depends, and that structures complementing the aesthetics and scale of the Old World Bavarian-Alpine theme form a key part of the overall visual attractiveness of the city, and thereby contribute both to the aesthetic and economic well-being of the city of Leavenworth. Consistent with the city of Leavenworth's Old World Bavarian-Alpine theme, the city has adopted the sign, zoning, and development codes to regulate the heights of structures, buildings and facilities, to provide for safety concerns, to regulate advertising, to maintain and improve the community appearance, to eliminate visual clutter, to ensure traffic safety, to preserve property values and to attract sources of economic development to the city.

Without limiting the generality in the preceding paragraph, the city of Leavenworth expressly finds that the regulations set forth in this chapter further the following substantial interest of the city and its citizens:

A. Maintenance and improvement of the community's appearance;
B. Elimination of visual clutter;
C. Ensuring and improving traffic/property safety;

D. Preserving property values;
E. Attracting sources of economic development. [Ord. 1336 § 1, 2009.]

14.17.020 Definitions.

"Flag" means a fabric or other flexible material attached to or designed to be flown from a flagpole or similar device.

"Flag, business" means a flag or representation of a flag displaying the letters, figures, design, symbol, trademark or device, including artificial representation of stock-in-trade, name, insignia, emblem, logo, product, service, or other graphic representation of a business.

"Flag, government" means an official flag displaying the name, insignia, emblem, or logo of any nation, state, municipality, or similar type of organization.

"Flagpole" means a free-standing structure or a structure attached to a building/structure or to the roof of a building/structure and used for the purpose of displaying flags.

"Light display" means an outdoor visual exhibition designed to dominate surrounding uses by incorporating items such as intense lighting which focuses attention on location.

"Tower/tower structure" means a structure taller than its diameter which can stand alone or be attached to a building or other structure, and anything tall and thin approximating the shape of a column or tower.

Other. To the extent not defined in this chapter, words used in this chapter will be defined according to the definitions used within LMC Titles 14 through 21 and the definitions found within the 2006 International Building Code, as amended in subsequent adoptions by the Washington State Legislature. [Ord. 1336 § 1, 2009.]

14.17.030 Scope.

The regulations set out in this chapter apply to flags, flagpoles, towers, tower structures and light displays in all zone districts. [Ord. 1336 § 1, 2009.]

14.17.040 Permits required.

A. No flagpole, tower, or tower structure 15 feet in height or greater shall be erected or constructed without first obtaining a building permit pursuant to the 2006 International Building Code, Section 105.1, Permits Required, as amended.

B. Unless additional review is required pursuant to LMC 14.17.060, a building permit application for a flagpole, tower, or tower structure shall be reviewed for compliance with this chapter and all applicable codes and a decision to approve, approve with conditions, or deny shall be issued within 21 days of receipt of a fully complete permit application. All applications for flagpoles, towers or tower structures requiring a building permit shall include plans and specifications stamped by a professional licensed engineer to assure proper grounding, strength, wind resistance, seismic loads, and other relevant engineering requirements.

C. Metal flagpoles requiring a building permit shall be engineered and constructed in accordance with the American National Standard Institute - National Association of Architectural Metal Manufacturers (ANSI/NAAMM) Guide Specifications for Design of Metal Flagpoles, FP 1001-97 as amended, and as adopted in the 2006 International Building Code, Section 102.4. [Ord. 1336 § 1, 2009.]

14.17.050 Approval process.

Persons seeking permits or approval under this chapter shall be subject to the limited administrative review process pursuant to LMC Title 21. The city may seek consultation for height and lighting restrictions through the Federal Aviation Administration. [Ord. 1336 § 1, 2009.]

14.17.060 Business signage/advertising.

Flags, other than government flags, flagpoles, towers, and related structures, uses or displays which are designed for or in effect serve advertising purposes and/or focus attention on location for business purposes shall be considered signage and shall be regulated by the city's sign and architectural theme ordinances, and are subject to the review and approval of the city's design review board. [Ord. 1336 § 1, 2009.]

14.17.070 Height.

The top of all flags (including the flagpole), towers or similar structures and/or displays, regardless of the manner of mounting, shall be no higher than the height restriction for buildings/structures in the zone district in which they are located. [Ord. 1336 § 1, 2009.]

14.17.080 Setbacks.

Flags, flagpoles, towers and similar structures and/or displays must be set back sufficient distance from property lines so as not to create a safety hazard on adjacent property. These structures and their related flags shall be set back sufficient distance to enable the flag to fly fully open without flying over the property of others, unless express permission in writing has been given by the property owner to do so. [Ord. 1336 § 1, 2009.]

14.17.090 Size.

The maximum flag size allowed on a flagpole, tower, tower structure, or similar structure shall be as follows:

Flagpole/Structure	Size of Flag (Maximum)
20 ft.	4 ft. by 6 ft.
25 ft.	5 ft. by 8 ft.
30 ft. – 35 ft.	6 ft. by 10 ft.
40 ft. – 45 ft.	6 ft. by 10 ft. or 8 ft. by 12 ft.
50 ft.	8 ft. by 12 ft. or 10 ft. by 15 ft.

Changes to the dimensional standard of the flag shall be allowed if the total area of the flag allowed is not exceeded and if it can be demonstrated that the revision to

dimensional standards meets the intent of the Leavenworth Municipal Code. [Ord. 1336 § 1, 2009.]

14.17.100 Number.

A. No more than three flagpoles, towers or similar structures shall be allowed per parcel or lot.

B. No more than three flags may be mounted vertically and/or displayed on each flagpole, tower or similar structure located on a parcel or lot. Furcated poles with multiple mounting structures shall not be allowed.

C. Small flags (not to exceed 24 square feet) mounted in stanchions on the face/eaves of buildings and flags which are displayed flush to the face of the building are not limited in number (unless subject to LMC 14.17.060, in which case, limitations may apply). [Ord. 1336 § 1, 2009.]

14.17.110 Manner of display.

Flags and insignia of any government should be displayed in as approved manner pursuant to federal guidelines in Title 4, United States Code, Chapter 1 (the Federal Flag Code). [Ord. 1336 § 1, 2009.]

14.17.120 Light display.

Lighting of the flagpole at night is allowed. To contain the impacts of unsafe lighting and light pollution, the city prohibits the following when used with or for flags, flagpoles, towers or similar structures regulated under this chapter:

A. Floodlights, searchlights, beacons, and laser source light fixtures which are not confined to illumination of the pole and flag;

B. Neon lighting;

C. Lighting which creates hazards to pedestrian and traffic safety, and which is a nuisance to surrounding properties because of excessive glare, excessive light production in relation to need, and/or lighting which create shadow and light which together create a hazard; and

D. Blinking, flashing, animated, and/or moving lights.

Whenever possible downlighting and shielding/baffling of fixtures shall be incorporated into the design of the flag, flagpole, tower, tower structure, and light display. [Ord. 1336 § 1, 2009.]

14.17.130 Nonconformance.

A. Preexising Nonconforming Flags, Flagpoles, Towers, and Similar Structures and/or Displays. No outdoor flag, flagpole, tower or similar structure and/or light display which was lawfully installed prior to the enactment of the ordinance creating this chapter of the Leavenworth Municipal Code shall be required to be removed or modified except as expressly proved herein; however, no modification, alteration or replacement shall be made to a nonconforming structure unless the structure thereafter conforms to the provisions of this chapter. Normal maintenance and repair of any flag, flagpole, tower or similar structure and/.or light display shall be allowed.

B. Conformance after Abandonment/Damage. In the event that a flag, flagpole, tower or similar structure and/or light display is abandoned for more than one year, or is damaged beyond 75 percent of appraised, assessed value, the repaired or replacement

flag, flagpole, tower or similar structure or light display shall comply with the provisions of the chapter. [Ord. 1336 § 1, 2009.]

14.17.140 Variances.

Variances from the standards of this chapter shall be pursuant to the processes outlined in Chapter 18.56 LMC, Variance, and LMC 21.09.050, Quasi-judicial review of applications, and shall be made to and decided by the Leavenworth hearing examiner pursuant to LMC 21.03.060(E). [Ord. 1336 § 1, 2009.]

14.17.150 Appeals.

Any person aggrieved by any part, requirement or process of this chapter shall have the right and obligation to seek administrative review of this chapter or any decision made pursuant to it. Appeals of decision of the community development director, the building official and/or the design review board or their designees made under this chapter, shall be to the Leavenworth hearing examiner pursuant to the processes set forth in Chapter 21.11 LMC, Appeals, and LMC 21.03.050(A)(1). See LMC 21.03.060(J) and (K) and LMC 21.15.070(A)(10) and (11). An applicant aggrieved by any part, requirement or process set forth in this chapter must exhaust all available administrative remedies before seeking recourse in the courts. [Ord. 1336 § 1, 2009.]

14.17.160 Administrative interpretation.

Administrative interpretations of this chapter shall be made by the director of community development pursuant to Chapter 21.03 LMC. [Ord. 1336 § 1, 2009.]

14.17.170 Compliance and enforcement.

Compliance and enforcement of this chapter shall be pursuant to Chapter 21.13 LMC, Enforcement and Appeals. [Ord. 1336 § 1, 2009.]

14.17.180 Severability.

If any section, subsection, sentence, clause, or phrase of this chapter is, for any reason, held to be invalid or unconstitutional, such invalidity or unconstitutionality shall not affect the validity of constitutionality of the remaining portions of this chapter. [Ord. 1336 § 1, 2009.]

Chapter 14.28
LIGHTING STANDARDS

Sections:

14.28.010 Purpose.
14.28.020 Scope.
14.28.030 Conformance with other regulations.
14.28.040 Definitions.
14.28.050 Permits required.
14.28.060 Permit applications.
14.28.070 Approval process.
14.28.080 General standards.
14.28.090 Specific standards.
14.28.110 Exemptions.
14.28.120 Prohibitions.
14.28.130 Nonconforming uses.
14.28.140 Variances.
14.28.150 Administrative interpretations.
14.28.160 Appeals.
14.28.170 Compliance and enforcement.
14.28.180 Severability.

14.28.010 Purpose.

A. It is the purpose of this chapter to encourage lighting practices and systems which will minimize light trespass and glare while maintaining night-time safety, utility, security and productivity.

B. It is recognized that the residents who live in and near the city of Leavenworth value the natural environment and desire to protect it as a resource which adds to the rural character, quality of life, and economic well-being of the city and its surrounding environment and that prevention of overlighting, light trespass, and glare plays an important role in maintaining this character. [Ord. 1268 (Exh. C), 2005.]

14.28.020 Scope.

The standards included in this chapter are intended primarily for outdoor lighting related to subdivisions, development and redevelopment; however, indoor lighting which has the capacity to create light trespass and glare, such as that within partially enclosed spaces, is also regulated by this chapter. [Ord. 1268 (Exh. C), 2005.]

14.28.030 Conformance with other regulations.

In the event of conflict between the regulations set forth in this chapter and any other regulations, the more stringent limitation(s) and requirement(s) shall govern unless otherwise interpreted by the community development director. [Ord. 1268 (Exh. C), 2005.]

14.28.040 Definitions.

As used in this chapter, unless the context clearly indicates otherwise, certain words and phrases shall mean the following:

A. “Abandonment” means the discontinuation of use for a period of one year.

B. “Community development director” means the director of community development for the city of Leavenworth and his/her designee.

C. “Direct illumination” means illumination resulting from light emitted directly from a lamp or luminaire, not light diffused through translucent signs or reflected from other surfaces such as the ground or building faces.

D. “Fully shielded fixture” means a light fixture or luminous tube constructed and mounted such that all light emitted by the fixture or tube, either directly from the lamp, tube, or a diffusing element, or indirectly by reflection or refraction from any part of the luminaire, is projected below the horizontal. A practical working way to determine if a fixture or tube is fully shielded: if the lamp or tube, any reflective surface, or lens cover (clear or prismatic) is visible when viewed from above or directly from the side, or from any angle around the fixture or tube, the fixture or tube is not fully shielded.

1. Examples of fixtures that are fully shielded: See Attachment A.
2. Examples of fixtures that are not fully shielded: See Attachment B.

E. “Glare” occurs when a bright light source causes the eye to continually be drawn toward the bright image or brightness of the source prevents the viewer from adequately viewing the intended target. Glare may create a loss of contrast or an afterimage on the retina of the eye reducing overall visibility. Two classifications of glare are discomfort glare and disability glare.

1. “Discomfort glare” does not necessarily keep the viewer from seeing an object, but does cause a constant adaptation of the eye to the contrast of light levels that in turn may cause a sensation of discomfort.
2. “Disability glare” occurs when the bright light source causes stray light to scatter in the eye which causes the primary image on the retina to be obscured. It may prevent the viewer from seeing things of importance.

F. “Installed” means attached, or fixed in place, whether or not connected to a power source.

G. “Light trespass” occurs when neighbors of an illuminated space are affected by the lighting system’s inability to contain light within the area intended. The most common form of light trespass is spill light which illuminates objects beyond the property boundaries.

H. “Low wattage” is lighting which is “muted,” diffused and for purposes of this chapter is used primarily for architectural embellishment. This light shall not shine, glare, emit direct illumination, or cast a shadow on the adjacent property.

I. “Lumen” means the unit used to measure the actual amount of visible light that is produced by a lamp.

J. “Luminaire” means the complete lighting assembly, including the lamp, housing, shields, lenses and associated electronics, less the support assembly. A light fixture.

K. “Luminous tube (neon tube)” means a glass tube filled with a gas or gas mixture (including neon, argon, mercury or other gasses), usually of small diameter (10 to 15 millimeter), caused to emit light by the passage of an electric current, and commonly bent into various forms for use as decoration or signs. Does not include common fluorescent tubes.

L. “Mounting height” shall be measured as the vertical distance between the parking surface and the bottom of the lighting fixture.

M. “Outdoor light fixture” means an outdoor electrically powered illuminating device, outdoor lighting or reflective surface, lamp, luminous tubeand/or similar devices, either permanently installed or portable, which is used for illumination or advertisement. Such devices shall include, but are not limited to, search, spot and floodlights for:

1. Buildings and structures;
2. Recreational areas;
3. Parking lot lighting;
4. Landscape and architectural lighting;
5. Billboards and other signs (advertising or other);
6. Street lighting;
7. Product display area lighting;
8. Building overhangs and open canopies;
9. Pedestrian walkways or areas;
10. Building or landscape decoration.

N. “Outdoor recreation facility” means an area designed for active recreation, whether publicly or privately owned, including, but not limited to, baseball diamonds, soccer and football fields, golf courses, tennis courts and swimming pools.

O. “Person” means any individual, lessee, owner, or any commercial entity including but not limited to firm, business, partnership, joint venture, or corporation.

P. “Rope lights” means lights which simulate neon lighting and are in an enclosed tube.

Q. Substantial alteration or remodel. (See the International Construction Code definition.)

R. “Temporary lighting” means lighting which does not conform to the provisions of this chapter and which will not be used for more than a temporary period. Temporary lighting is intended for uses which by their nature are of limited duration; e.g., civic events, or construction projects.

S. “Total outdoor light output” means the maximum total amount of light, measured in lumens, from all outdoor light fixtures on a project site. Includes all lights and luminous tubing used for all classes of lighting. For lamp types that vary in their output as they age (such as high pressure sodium, metal halide, and fluorescent), the initial output, as defined by the manufacturer, is the value to be considered. [Ord. 1268 (Exh. C), 2005.]

14.28.050 Permits required.

A. Residential lighting permits shall be reviewed concurrently with the application for a building permit or other related approval.

B. Inspections for compliance with this chapter are required.

C. Building, Subdivision, Landscaping, Parking, and Other Similar Lighting Permits (Does Not Include Single-Family Residential Building Permits). When a person seeks a permit for one of the above-listed project types, a lighting permit shall be applied for. The applicant shall, as a part of said application, submit sufficient information as delineated by the community development director to determine if the proposed lighting shall comply with this chapter.

D. Single-Family Residential Lighting Permits – Not Required. Lighting on single-family residential sites (primarily substantial remodels, and new construction) will be reviewed on-site, and compliance with applicable portions of this chapter verified before

issuance of the certificate of occupancy. A lighting permit separate from the building permit is not required. [Ord. 1268 (Exh. C), 2005.]

14.28.060 Permit applications.

Persons seeking permits or approval under this chapter shall:

A. Complete and submit an application for a lighting permit.

B. All permits which shall be issued pursuant to administrative processes outlined under "Limited administrative review" in LMC 21.09.030.

C. Lighting permits shall be reviewed and approved by the design review board in addition to the community development director. Zone 1 (see LMC 14.28.080(A)(1)). [Ord. 1268 (Exh. C), 2005.]

14.28.070 Approval process.

A. Person seeking permits or approval under this chapter shall be subject to the level of review required for the associated building permit pursuant to LMC Title 21. If there is no associated level of review, the application shall be processed pursuant to "Limited administrative review."

B. Temporary Lighting Permits.

1. The community development director may grant a permit for temporary lighting which is not compliant with the requirements of this chapter if he/she finds the following:

a. The proposed lighting is designed in such a manner as to minimize lighting impacts as much as is feasible;

b. The proposed lighting will comply with the general intent of this chapter; and

c. The permit will be for a limited duration of time.

2. The community development director may grant a renewal of the permit if he/she finds that, because of an unanticipated change in circumstances, a renewal would be in the public interest. [Ord. 1268 (Exh. C), 2005.]

14.28.080 General standards.

A. Different areas, with different developed and natural conditions have differing levels of appropriate light usage, and different sensitivities to the various obtrusive aspects of light usage. Because of this, four lighting zones are hereby defined and established. These zones are described as follows and correspond with the zoned districts of the city's official zone map:

1. Zone 1: All areas within the city of Leavenworth and its UGA which are zoned commercial and multifamily;

2. Zone 2: All areas within the city of Leavenworth and its UGA which are zoned industrial;

3. Zone 3: All areas within the city of Leavenworth and its UGA which are zoned residential; and

4. Zone 4: All areas within the city of Leavenworth and its UGA which are zoned recreation and recreation-public.

B. Light fixtures shall be aimed, shielded, diffused, and/or have a limited height so that the direct illumination shall be confined to the property boundaries of the source as

much as is feasible and light spilled into the night sky or adjacent properties is minimized. All zones.

C. Compliance with the energy conservation standards of the Washington State Energy Code is required. (See the Washington State Energy Code, 2001 Edition.) All zones.

D. On new construction and substantial remodels, exterior lighting installations shall be designed to avoid harsh contrasts in lighting levels for the purpose of reducing glare. Zones 1, 2, and 4.

E. Fixtures and lighting systems used for safety and security shall be in good working order and shall be maintained in a manner that serves original permit requirements. All zones.

F. Vegetation and landscaping shall be maintained in a manner that does not obstruct security lighting and minimizes possible entrapment spaces pursuant to original permit requirements. All zones. [Ord. 1268 (Exh. C), 2005.]

14.28.090 Specific standards.

In addition to those standards required under LMC 14.28.080, General standards, the following prescriptive standards will apply within specific areas and for specific uses as delineated below.

A. Service Station Canopies.

1. Shielding. All luminaires mounted on or recessed into the lower surface of service station canopies shall be fully shielded and utilize flat lenses.

2. Total Under-Canopy Output. The total light output used for illumination under a service station canopy shall be limited to the following:

a. The sum of all under-canopy initial bare-lamp outputs in lumens, shall not exceed 60 lumens per square foot of canopy.

b. All lighting mounted under the canopy, including but not limited to luminaires mounted on the lower surface or recessed into the lower surface of the canopy and any lighting within signage or illuminated panels over the pumps, is to be included toward the total at full initial lumen output.

B. Outdoor Recreation Facilities.

1. Fixtures shall be fully shielded.

2. Fixtures shall remain extinguished outside of normal operating hours.

3. Fixtures are exempt from mounting height restrictions but shall only be elevated to the height necessary to serve the immediate purpose for which they are being used.

C. Open-Air Parking Lots.

1. Fixtures shall be fully shielded;

2. For multilevel parking facilities, the roof level shall be considered an open-air parking lot;

3. Fixtures shall be designed, located, constructed and maintained so that, as much as is feasible, they will not cause direct illumination on adjacent and nearby properties or streets; and

4. The mounting height of fixtures shall not exceed 15 feet above grade or pavement.

D. Parking Structures.

1. Fixtures shall be fully shielded.

2. Interior fixtures shall be designed, located, constructed, and maintained so that as much as is feasible light and reflected light does not spill over or intrude onto adjacent and nearby properties or streets; and

3. The parking structure shall be designed and constructed so that as much as is feasible, light and reflected light from cars within the structure does not spill over or intrude onto adjacent and nearby properties or streets.

E. Subdivision Lighting (Applies to Subdivisions for All Land Uses).

1. All lighting for public thoroughfares and pedestrian areas shall be soft and diffused with the primary purpose of safety;

2. A street light shall be installed at every corner which borders on a dedicated street;

3. Long blocks shall contain intermittent lighting which breaks up the block;

4. Street light mounting heights shall be limited to 20 feet;

5. Light shall be directed onto sidewalks and streets but not onto adjacent properties; and

6. Fixtures shall be fully shielded.

F. Commercial/Industrial Lighting (Zones 1 and 2). Owners of new construction and substantial remodels shall be required to sign a waiver of protest to participation in a local improvement district which will pay for future lighting infrastructure.

G. Private Installations on City Property.

1. Property owners may install temporary lighting in the right-of-way subject to design approval by the design review board (commercial zones) and engineering approval by the public works director.

2. Street lights installed in the public right-of-way belong to the property owner and are subject to repair and maintenance by the property owner; and

3. The city may require removal of lights within the public right-of-way at any time. [Ord. 1268 (Exh. C), 2005.]

14.28.110 Exemptions.

The following uses are exempt in all zones from all requirements of this chapter. Only the provisions noted following that specific item shall be required.

A. Low-wattage holiday decorations and decorative lighting. All zones.

1. Holiday decorations and decorative lighting shall conform with LMC 14.28.120(A).

2. All such lighting and all associated wiring used outdoors shall be certified for outdoor use by the National Electrical Code.

B. Construction lighting for emergency repairs of a temporary nature. All zones.

C. Diffused, muted lighting used for yards, driveways, landscaping, and/or applied to building faces. Zone 3.

D. Radio, Communication, and Navigation Tower Lighting. For areas which are to be exempt, the applicant must demonstrate a verifiable legal or public safety need for exemption to the requirements of this chapter. [Ord. 1268 (Exh. C), 2005.]

14.28.120 Prohibitions.

The following are prohibited:

A. Blinking, flashing, moving, revolving, flickering, changing intensity or color, chase lighting, rope lights, and neon, except lighting which is required for public safety: Lighting Zone 1 (commercial districts only).

B. Any light fixture that may be confused with or construed as a traffic control device: All zones.

C. Any upward oriented lighting, including sign lighting, except as otherwise provided for in this chapter shall only be allowed when upward-oriented lighting is completely contained by an overhanging architectural element: All zones.

D. Searchlights, beacons, and laser source light fixtures: All zones. [Ord. 1268 (Exh. C), 2005.]

14.28.130 Nonconforming uses.

A. Pre-Existing Nonconforming Lighting.

1. No outdoor lighting fixture which was lawfully installed prior to the enactment of this chapter shall be required to be removed or modified except as expressly provided herein; however, no modification or replacement shall be made to a nonconforming fixture unless the fixture thereafter conforms to the provisions of this chapter.

2. Where an existing legal nonconforming fixture can be adjusted to continue to serve its primary purpose, but provide for less light trespass onto adjacent properties, said fixture shall be adjusted to come into greater compliance with the requirements of this chapter.

B. Conformance After Abandonment/Damage. In the event that an outdoor lighting fixture is abandoned for more than one year or is damaged to the point of requiring repairs for safe operation, the repaired or replacement fixture shall comply with the provisions of this chapter. [Ord. 1268 (Exh. C), 2005.]

14.28.140 Variances.

A. Any person desiring a variance from the standards within this chapter may apply to the hearing examiner pursuant to the processes in LMC Title 21.

B. Alternative Materials and Methods of Construction or Installation/Operation. The provisions of this chapter are not intended to prevent the use of any design, material or method of installation or operation not specifically prescribed by this code, provided any such alternate has been approved by the community development director.

1. The community development director may approve any such proposed alternate, provided he/she finds that it:

a. Provides at least approximate equivalence to the applicable specific requirements of this chapter;

b. Provides for greater compliance with the Old World Bavarian architectural theme and sign ordinances;

c. Provides for greater public safety; and

d. Is otherwise satisfactory and complies with the intent of this chapter. [Ord. 1268 (Exh. C), 2005.]

14.28.150 Administrative interpretations.

Administrative interpretations of this chapter shall be made by the director of community development pursuant to the processes within LMC Title 21. [Ord. 1268 (Exh. C), 2005.]

14.28.160 Appeals.

Appeals of the decisions made under this chapter shall be pursuant to the processes within LMC Title 21. [Ord. 1268 (Exh. C), 2005.]

14.28.170 Compliance and enforcement.

Compliance and enforcement of this chapter shall be conducted by the director of community development pursuant to the processes within LMC Title 21. [Ord. 1268 (Exh. C), 2005.]

14.28.180 Severability.

If any section, subsection, sentence, clause, or phrase of this chapter is, for any reason, held to be invalid or unconstitutional, such invalidity or unconstitutionality shall not affect the validity or constitutionality of the remaining portions of this chapter. [Ord. 1268 (Exh. C), 2005.]

Attachments A & B

A Fully Shielded Fixture

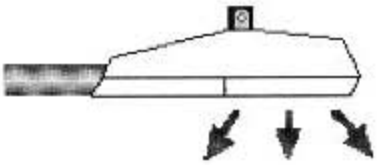

Fully shielded lamp—notice that the lens cover is not visible when viewed directly from the side, or from any angle around the fixture.

B Non Fully Shielded Fixtures

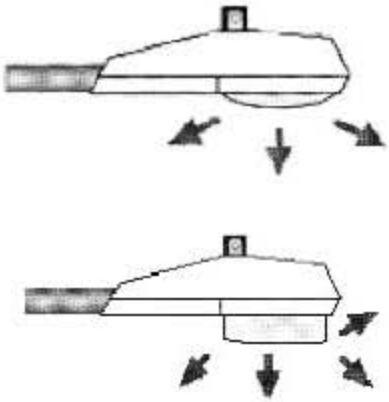

Partially shielded lamps—notice that the lens cover is visible when viewed directly from the side.

Non-shielded lamp—no shielding of any kind is present in this type of fixture.